RCP6(S)W-WRA10C

Dust/Splash-Proof Spec | Battery-less Absolute | Motor Unit Type | Coupled Motor | Body Width 100 mm | 24v Stepper Motor

Model Specification Items

Series	Type	Encoder Type	Motor Type	Lead	Stroke	Applicable Controller/I/O Type	Cable Length	Options
	WRA10C	WA	35P					
RCP6W: Separate Controller RCP6SW: Built-in Controller		WA: Battery-less Absolute	35P: Stepper Motor 35□ Size	10 : 10mm 5 : 5mm 2.5 : 2.5mm	50:50mm ~ 500:500mm (Every 50mm)	[RCP6W] P3 : PCON MCON MSEL P5 : RCM-P6PC [RCP6SW] SE: SIO Type	N : None P : 1m S : 3m M: 5m X□□ : Specified Length R□□ : Robot Cable	Please refer to the options table below.

* RCP6 does not include a controller. RCP6S includes a built-in controller.
* Please refer to P.20 for more information about the model specification items.

Radial Load Applicable

CE RoHS

Horizontal | Vertical | Side | Ceiling

*Some limitations may apply to horizontal/ side/ceiling mountings depending on the model. See page 204. Please contact IAI for more information.

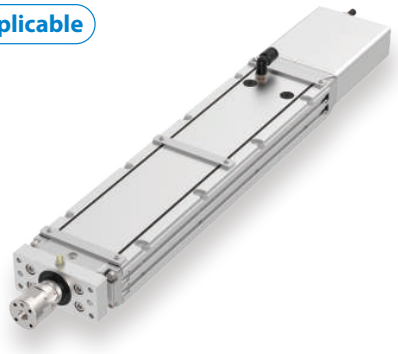

POINT Selection Notes

(1) The maximum acceleration/deceleration is 1G for horizontal, and 0.5G for vertical use.
(2) The actuator specifications displays the payload's maximum value, but it will vary depending on the acceleration and speed. Please refer to the "Selection Guidelines" (Tables of Payload by Speed/Acceleration) on P.239 for more details.
(3) The radial cylinder is equipped with a built-in guide. Please refer to the graphs shown on P.246 and after for the allowable load mass.
(4) Please refer to P205 for performing push-motion operation.
(5) The cable joint connector is not splash-proofed, so it should be located where there is no splash.
(6) The RCP6SW with built-in controller does not have a teaching tool connection port. Connect the teaching tool to the gateway unit and configure parameter data etc. via the gateway unit.

Correlation Diagrams of Speed and Payload

If the ambient temperature is 5°C or below, the speed will be lower than when it exceeds 5°C.

High-output enabled with PCON/MCON/MSEL connected.

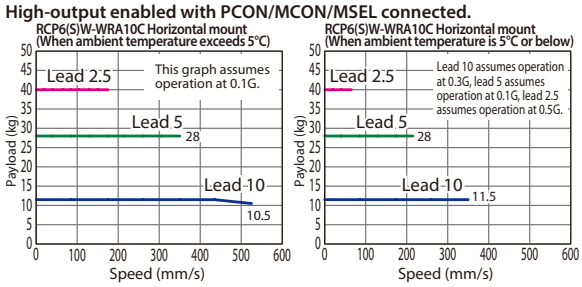

High-output enabled with PCON/MCON/MSEL connected.

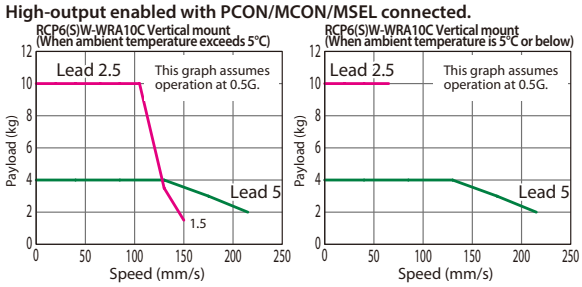

Actuator Specifications

Lead and Payload

* Horizontal external guide rail required for horizontal payload.
** Push force only available during push mode w / limited speed.

Model Number	Lead (mm)	Max. Payload Horizontal (kg)*	Max. Payload Vertical (kg)	Max. Push Force (N)**	Stroke (mm)
RCP6(S)W-WRA10C-WA-35P-10-①-②-③-④	10	11.5	–	77	50~500 (Every 50mm)
RCP6(S)W-WRA10C-WA-35P-5-①-②-③-④	5	28	4	155	
RCP6(S)W-WRA10C-WA-35P-2.5-①-②-③-④	2.5	40	10	310	

Legend: ① Stroke ② Applicable controllers/I/O type ③ Cable length ④ Options

Stroke and Max Speed (Unit: mm/s)

Lead (mm)	50~400 (Every 50mm)	450	500
10	525 [350]		490 [350]
5	350 <215> [215]	290 <215> [215]	240 <215> [215]
2.5	175 <150> [65]	145 [65]	120 [65]

Values in brackets < > are for vertical use.
Values in brackets [ ] are when ambient temperature is 5°C or below.

① Stroke

Stroke (mm)	RCP6W	RCP6SW	Stroke (mm)	RCP6W	RCP6SW
50	○	○	**300**	○	○
100	○	○	**350**	○	○
150	○	○	**400**	○	○
200	○	○	**450**	○	○
250	○	○	**500**	○	○

③ Cable Length

Cable Type	Cable Code	RCP6W P3	RCP6W P5	RCP6SW SE
Standard	**P**(1m)	○	○	○
	S(3m)	○	○	○
	M(5m)	○	○	○
Specified length	**X06** (6m) ~**X10** (10m)	○	○	○
	X11 (11m) ~**X15** (15m)	○	○	○
	X16 (16m) ~**X18** (18m)	○	○	○
Robot cable	**R01** (1m) ~**R03** (3m)	○	○	○
	R04 (4m) ~**R05** (5m)	○	○	○
	R06 (6m) ~**R10** (10m)	○	○	○
	R11 (11m) ~**R15** (15m)	○	○	○
	R16 (16m) ~**R18** (18m)	○	○	○

* Select the length of the actuator cable and the actuator/controller connection cable so that the total is 20m or less.
* Please refer to P. 267 and 283 for more information regarding the maintenance cables.

④ Options

Name	Option Code	Reference Page
Actuator cable length 2m	**Not specified**	See P.197
Actuator cable length 5m	**AC5**	See P.197
Actuator cable length 10m	**AC10**	See P.197
Actuator cable length 15m	**AC15**	See P.197
Brake	**B**	See P.197
Cable exit direction (Bottom)	**CJB**	See P.197
Cable exit direction (Left)	**CJL**	See P.197
Cable exit direction (Right)	**CJR**	See P.197
Cable exit direction (Top)	**CJT**	See P.197
Flange	**FL**	See P.198
Non-motor end specification	**NM**	See P.202
T-slot nut bar (Left)	**NTBL**	See P.202
T-slot nut bar (Right)	**NTBR**	See P.202

Actuator Specifications

Item	Description
Drive system	Ball screw ϕ8mm, rolled C10
Positioning repeatability	±0.01mm
Lost motion	0.1mm or less
Rod	ϕ25mm
Rod non-rotation precision	0 degrees
Allowable load and torque on rod tip	See P. 246
Rod tip overhang distance	100mm or less
Protective structure	IP65 (IEC 60529/JIS C 0920)
Ambient operating temp. & humidity	0~40°C, 85% RH or less (Non-condensing)

Dimensions

CAD drawings can be downloaded from our website.
www.intelligentactuator.com

2D CAD 3D CAD

*1 When the rod is returning to its home position, please be careful of interference from surrounding objects, as it will travel until it reaches the M.E.
M.E: Mechanical end S.E: Stroke end
*2 If the object attached to the rod has a long overhang length, or precise angular adjustment of the object is required, please do not use the reamed hole when the object is attached to the rod.

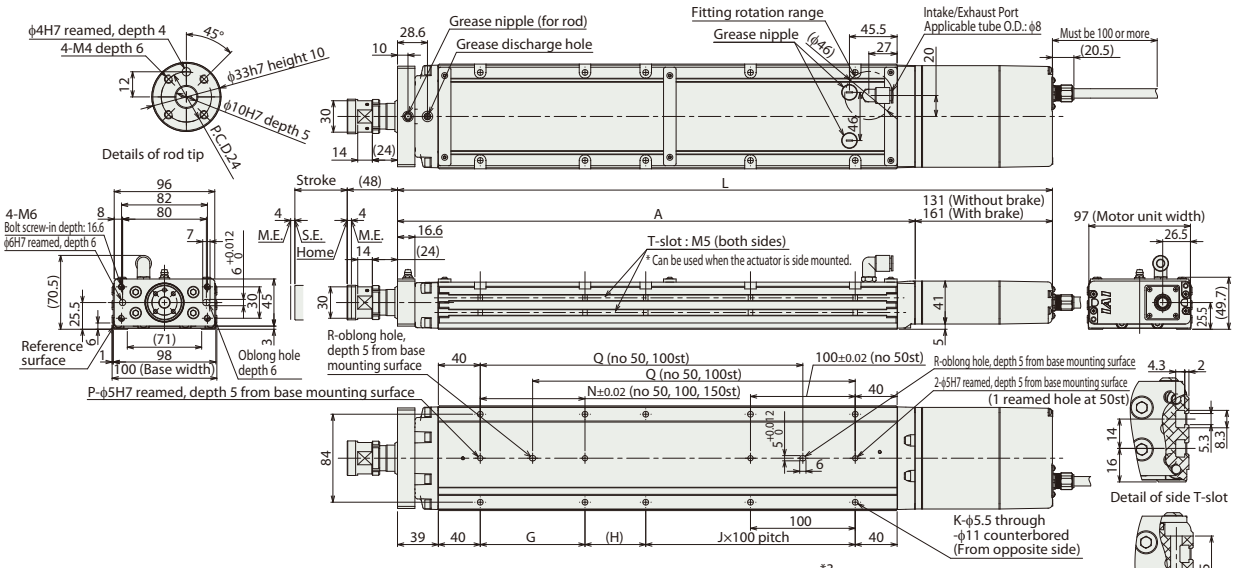

■ RCP6SW-WRA10C

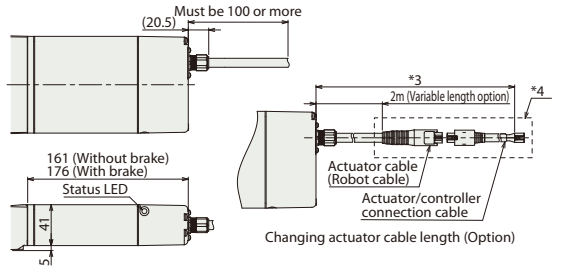

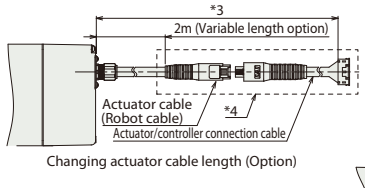

*3 Select the length of the actuator cable and the actuator/controller connection cable so that the total is 20m or less.
*4 The cable joint (connector) within the dotted line is not splash-proofed.

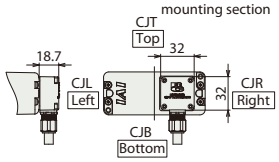

Cable exit direction (Option)

■ Rod Deflection of RCP6(S)W-WRA10C (Reference Values)

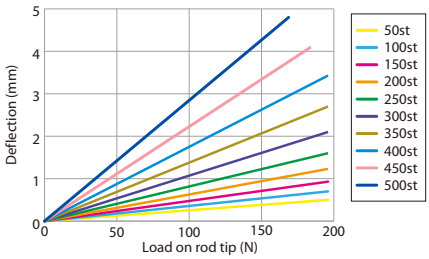

* Please refer to P.253 for more information on component materials.

■ Dimensions and Mass by Stroke

Stroke			50	100	150	200	250	300	350	400	450	500
L	RCP6W	w/o brake	375.3	425.3	475.3	525.3	575.3	625.3	675.3	725.3	775.3	825.3
		w/ brake	405.3	455.3	505.3	555.3	605.3	655.3	705.3	755.3	805.3	855.3
	RCP6SW	w/o brake	405.3	455.3	505.3	555.3	605.3	655.3	705.3	755.3	805.3	855.3
		w/ brake	420.3	470.3	520.3	570.3	620.3	670.3	720.3	770.3	820.3	870.3
A			244.3	294.3	344.3	394.3	444.3	494.3	544.3	594.3	644.3	694.3
G			-	-	-	100	100	100	100	100	100	100
H			108	58	108	58	108	58	108	58	108	58
J			0	1	1	1	1	2	2	3	3	4
K			4	6	6	8	8	10	10	12	12	14
N			-	-	-	100	100	100	100	100	100	100
P			1	1	1	2	2	2	2	2	2	2
Q			-	-	158	208	258	308	358	408	458	508
R			0	0	1	1	1	1	1	1	1	1
Allowable static load on rod tip (N)			196	196	196	196	196	196	196	196	184	169
Allowable static torque on rod tip (N•m)			10	10	10	10	10	10	10	10	10	10
3,000km	Allowable dynamic load on rod tip (N)	Load offset 0mm	98	98	98	95	85	76	68	62	57	52
		Load offset 100mm	50	50	50	50	50	50	50	50	50	49
	Allowable dynamic torque on rod tip (N•m)		5.0	5.0	5.0	5.0	5.0	5.0	5.0	5.0	5.0	4.9
5,000km	Allowable dynamic load on rod tip (N)	Load offset 0mm	98	98	91	80	71	63	57	52	47	43
		Load offset 100mm	50	50	50	50	50	50	50	48	44	40
	Allowable dynamic torque on rod tip (N•m)		5.0	5.0	5.0	5.0	5.0	5.0	5.0	4.8	4.4	4.0
Mass (kg)	RCP6W	w/o brake	3.7	4.1	4.6	5.0	5.5	5.9	6.4	6.8	7.3	7.7
		w/ brake	3.9	4.3	4.8	5.2	5.7	6.1	6.6	7.0	7.5	7.9
	RCP6SW	w/o brake	3.8	4.2	4.7	5.1	5.6	6.0	6.5	6.9	7.4	7.8
		w/ brake	4.0	4.4	4.9	5.3	5.8	6.2	6.7	7.1	7.6	8.0

② Applicable Controllers

The RCP6 series actuators can be operated by the controllers indicated below. Please select the type depending on your intended use. * Please refer to P.271 for more information about the built-in controller of RCP6S series.

Name	External view	Max. number of controlled axes	Input power	Control method: Positioner	Pulse train	Program	Network * Option	Maximum number of positioning points	Reference page
PCON-CYB/PLB/POB		1	DC24V	● * Option	● * Option	–	Network cannot be selected	64	Please contact IAI for more information.
PCON-CB/CGB		1		● * Option	● * Option	–	DeviceNet, CC-Link, PROFIBUS, CompoNet, MECHATROLINK, EtherCAT, EtherNet/IP, PROFINET, SSCNET III/H	512 (768 for network spec.)	See P.255
MCON-C/CG		8		This model is network-compatible only.				256	Please contact IAI for more information.
MCON-LC/LCG		6		–	–	●		256	Please contact IAI for more information.
MSEL-PC/PG		4	Single-phase 100 ~ 230 VAC	–	–	●		30,000	Please contact IAI for more information.
RCM-P6PC		1	Usable within the RCP6S Gateway system.					768	See P.279

Note: · The type of compatible networks will vary depending on the controller. Please refer to reference page for more information.

* For the MCON controller, high-output enabled operation is only available if "high-output setting" is selected as an option. The maximum connectable axes with high-output enabled are C: 4 and LC: 3.

RCP6(S)W-WRA12C

Dust/Splash-Proof Spec | Battery-less Absolute | Motor Unit Type | Coupled Motor | Body Width 120 mm | 24v Stepper Motor

Model Specification Items

Series	Type	Encoder Type	Motor Type	Lead	Stroke	Applicable Controller/I/O Type	Cable Length	Options
	WRA12C	WA	42P					
RCP6W: Separate Controller RCP6SW: Built-in Controller		WA: Battery-less Absolute	42P: Stepper Motor 42□ Size	12 :12mm 6 : 6mm 3 : 3mm	50:50mm ~ 500:500mm (Every 50mm)	[RCP6W] P3 : PCON MCON MSEL P5 : RCM-P6PC [RCP6SW] SE: SIO Type	N : None P : 1m S : 3m M: 5m X□□ : Specified Length R□□ : Robot Cable	Please refer to the options table below.

* RCP6 does not include a controller. RCP6S includes a built-in controller.
* Please refer to P.20 for more information about the model specification items.

Radial Load Applicable

CE RoHS

Horizontal | Vertical | Side | Ceiling

*Some limitations may apply to horizontal/ side/ceiling mountings depending on the model. See page 204. Please contact IAI for more information.

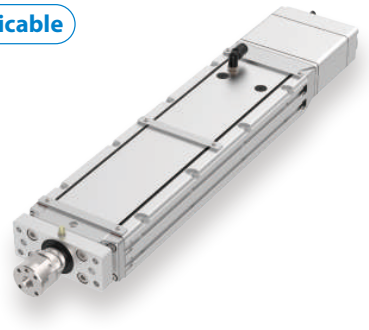

POINT Selection Notes

(1) The maximum acceleration/deceleration is 1G for horizontal, and 0.5G for vertical use.
(2) The actuator specifications displays the payload's maximum value, but it will vary depending on the acceleration and speed. Please refer to the "Selection Guidelines" (Tables of Payload by Speed/Acceleration) on P.239 for more details.
(3) The radial cylinder is equipped with a built-in guide. Please refer to the graphs shown on P.246 and after for the allowable load mass.
(4) Please refer to P205 for performing push-motion operation.
(5) Depending on the ambient operating temperature, duty control is necessary for the RCP6SW (built-in controller type) with lead 3/6. Please refer to P.247 for more information.
(6) The cable joint connector is not splash-proofed, so it should be located where there is no splash.
(7) The RCP6SW with built-in controller does not have a teaching tool connection port. Connect the teaching tool to the gateway unit and configure parameter data etc. via the gateway unit.

Correlation Diagrams of Speed and Payload

If the ambient temperature is 5°C or below, the speed will be lower than when it exceeds 5°C.

High-output enabled with PCON/MCON/MSEL connected.

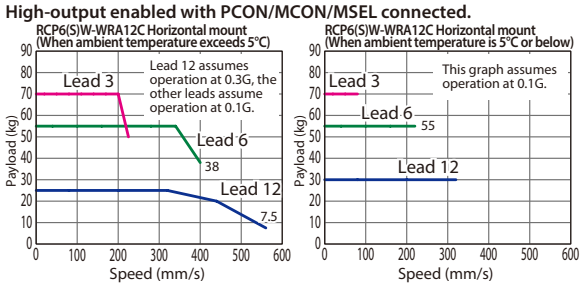

High-output enabled with PCON/MCON/MSEL connected.

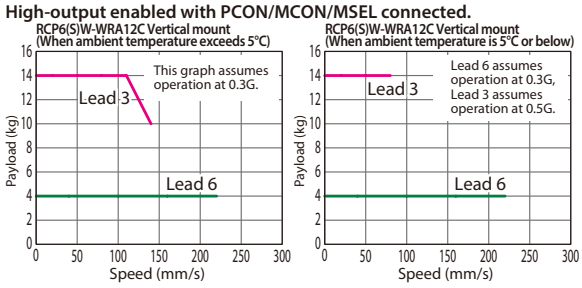

Actuator Specifications

Lead and Payload

* Horizontal external guide rail required for horizontal payload.
** Push force only available during push mode w / limited speed.

Model Number	Lead (mm)	Max. Payload Horizontal (kg)*	Max. Payload Vertical (kg)	Max. Push Force (N)**	Stroke (mm)
RCP6(S)W-WRA12C-WA-42P-12-①-②-③-④	12	30	–	93	50~500 (Every 50mm)
RCP6(S)W-WRA12C-WA-42P-6-①-②-③-④	6	55	4	185	
RCP6(S)W-WRA12C-WA-42P-3-①-②-③-④	3	70	14	370	

Legend: ① Stroke ② Applicable controllers/I/O type ③ Cable length ④ Options

Stroke and Max Speed (Unit: mm/s)

Lead (mm)	50~400 (Every 50mm)	450	500
12	560 [320]		
6	400 <220> [220]		375 <220> [220]
3	225 <140> [80]	220 <140> [80]	185 <140> [80]

Values in brackets < > are for vertical use.
Values in brackets [ ] are when ambient temperature is 5°C or below.

① Stroke

Stroke (mm)	RCP6W	RCP6SW	Stroke (mm)	RCP6W	RCP6SW
50	○	○	**300**	○	○
100	○	○	**350**	○	○
150	○	○	**400**	○	○
200	○	○	**450**	○	○
250	○	○	**500**	○	○

③ Cable Length

Cable Type	Cable Code	RCP6W P3	RCP6W P5	RCP6SW SE
Standard	**P**(1m)	○	○	○
	S(3m)	○	○	○
	M(5m)	○	○	○
Specified length	**X06** (6m) ~**X10** (10m)	○	○	○
	X11 (11m) ~**X15** (15m)	○	○	○
	X16 (16m) ~**X18** (18m)	○	○	○
Robot cable	**R01** (1m) ~**R03** (3m)	○	○	○
	R04 (4m) ~**R05** (5m)	○	○	○
	R06 (6m) ~**R10** (10m)	○	○	○
	R11 (11m) ~**R15** (15m)	○	○	○
	R16 (16m) ~**R18** (18m)	○	○	○

* Select the length of the actuator cable and the actuator/controller connection cable so that the total is 20m or less.
* Please refer to P. 267 and 283 for more information regarding the maintenance cables.

④ Options

Name	Option Code	Reference Page
Actuator cable length 2m	**Not specified**	See P.197
Actuator cable length 5m	**AC5**	See P.197
Actuator cable length 10m	**AC10**	See P.197
Actuator cable length 15m	**AC15**	See P.197
Brake	**B**	See P.197
Cable exit direction (Bottom)	**CJB**	See P.197
Cable exit direction (Left)	**CJL**	See P.197
Cable exit direction (Right)	**CJR**	See P.197
Cable exit direction (Top)	**CJT**	See P.197
Flange	**FL**	See P.198
Non-motor end specification	**NM**	See P.202
T-slot nut bar (Left)	**NTBL**	See P.202
T-slot nut bar (Right)	**NTBR**	See P.202

Actuator Specifications

Item	Description
Drive system	Ball screw ϕ10mm, rolled C10
Positioning repeatability	±0.01mm
Lost motion	0.1mm or less
Rod	ϕ30mm
Rod non-rotation precision	0 degrees
Allowable load and torque on rod tip	See P. 246
Rod tip overhang distance	100mm or less
Protective structure	IP65 (IEC 60529/JIS C 0920)
Ambient operating temp. & humidity	0~40°C, 85% RH or less (Non-condensing)

Dimensions

CAD drawings can be downloaded from our website.
www.intelligentactuator.com

2D CAD 3D CAD

*1 When the rod is returning to its home position, please be careful of interference from surrounding objects, as it will travel until it reaches the M.E.
M.E: Mechanical end S.E: Stroke end
*2 If the object attached to the rod has a long overhang length, or precise angular adjustment of the object is required, please do not use the reamed hole when the object is attached to the rod.

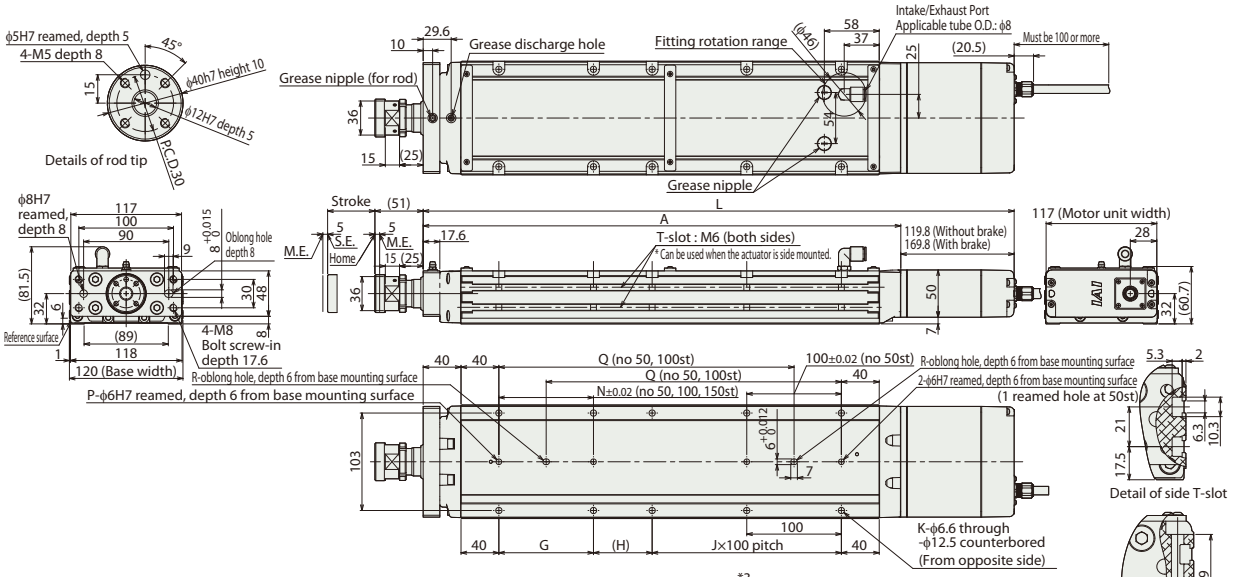

■ RCP6SW-WRA12C

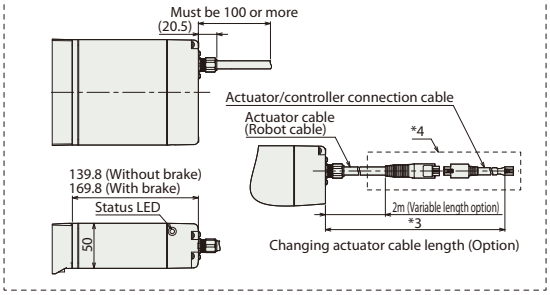

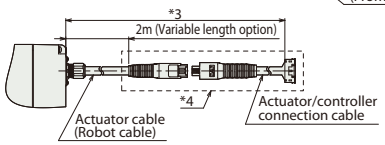

Changing actuator cable length (Option)

*3 Select the length of the actuator cable and the actuator/controller connection cable so that the total is 20m or less.
*4 The cable joint (connector) within the dotted line is not splash-proofed.

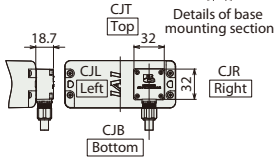

Cable exit direction (Option)

■ Rod Deflection of RCP6(S)W-WRA12C (Reference Values)

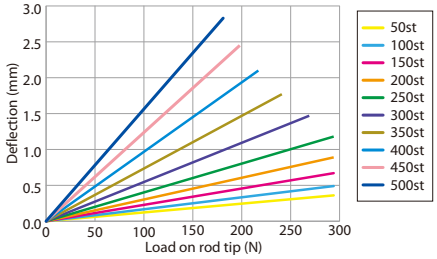

* Please refer to P.254 for more information on component materials.

■ Dimensions and Mass by Stroke

Stroke			50	100	150	200	250	300	350	400	450	500
L	RCP6W	w/o brake	374.6	424.6	474.6	524.6	574.6	624.6	674.6	724.6	774.6	824.6
		w/ brake	424.6	474.6	524.6	574.6	624.6	674.6	724.6	774.6	824.6	874.6
	RCP6SW	w/o brake	394.6	444.6	494.6	544.6	594.6	644.6	694.6	744.6	794.6	844.6
		w/ brake	424.6	474.6	524.6	574.6	624.6	674.6	724.6	774.6	824.6	874.6
A			254.8	304.8	354.8	404.8	454.8	504.8	554.8	604.8	654.8	704.8
G			-	-	-	100	100	100	100	100	100	100
H			112	62	112	62	112	62	112	62	112	62
J			0	1	1	1	1	2	2	3	3	4
K			4	6	6	8	8	10	10	12	12	14
N			-	-	-	100	100	100	100	100	100	100
P			1	1	1	2	2	2	2	2	2	2
Q			-	-	162	212	262	312	362	412	462	512
R			0	0	1	1	1	1	1	1	1	1
Allowable static load on rod tip (N)			294	294	294	294	294	269	241	218	198	181
Allowable static torque on rod tip (N•m)			20	20	20	20	20	20	20	20	20	20
3,000km	Allowable dynamic load on rod tip (N)	Load offset 0mm	147	147	137	121	107	96	87	79	72	65
		Load offset 100mm	100	100	100	100	99	90	82	75	68	63
	Allowable dynamic torque on rod tip (N•m)		10.0	10.0	10.0	10.0	9.9	9.0	8.2	7.5	6.8	6.3
5,000km	Allowable dynamic load on rod tip (N)	Load offset 0mm	147	133	115	101	90	80	72	65	59	54
		Load offset 100mm	100	100	100	92	83	75	68	62	56	51
	Allowable dynamic torque on rod tip (N•m)		10.0	10.0	10.0	9.2	8.3	7.5	6.8	6.2	5.6	5.1
Mass (kg)	RCP6W	w/o brake	5.2	5.8	6.5	7.1	7.8	8.4	9.1	9.7	10.4	11.0
		w/ brake	5.5	6.1	6.8	7.4	8.1	8.7	9.4	10.0	10.7	11.3
	RCP6SW	w/o brake	5.3	5.9	6.6	7.2	7.9	8.5	9.2	9.8	10.5	11.1
		w/ brake	5.6	6.2	6.9	7.5	8.2	8.8	9.5	10.1	10.8	11.4

② Applicable Controllers

The RCP6 series actuators can be operated by the controllers indicated below. Please select the type depending on your intended use. * Please refer to P.271 for more information about the built-in controller of RCP6S series.

Name	External view	Max. number of controlled axes	Input power	Control method: Positioner	Pulse train	Program	Network * Option	Maximum number of positioning points	Reference page
PCON-CYB/PLB/POB		1	DC24V	● * Option	● * Option	–	Network cannot be selected	64	Please contact IAI for more information.
PCON-CB/CGB		1		● * Option	● * Option	–	DeviceNet, CC-Link, PROFIBUS, CompoNet, MECHATROLINK, EtherCAT, EtherNet/IP, PROFINET, SSCNET III/H	512 (768 for network spec.)	See P.255
MCON-C/CG		8		This model is network-compatible only.				256	Please contact IAI for more information.
MCON-LC/LCG		6		–	–	●		256	Please contact IAI for more information.
MSEL-PC/PG		4	Single-phase 100 ~ 230 VAC	–	–	●		30,000	Please contact IAI for more information.
RCM-P6PC		1	Usable within the RCP6S Gateway system.					768	See P.279

Note: · The type of compatible networks will vary depending on the controller. Please refer to reference page for more information.

* For the MCON controller, high-output enabled operation is only available if "high-output setting" is selected as an option. The maximum connectable axes with high-output enabled are C: 4 and LC: 3.

RCP6(S)W-WRA14C

Dust/Splash-Proof Spec | Battery-less Absolute | Motor Unit Type | Coupled Motor | Body Width 140 mm | 24v Stepper Motor

■ Model Specification Items

Series	Type	Encoder Type	Motor Type	Lead	Stroke	Applicable Controller/I/O Type	Cable Length	Options
RCP6W: Separate Controller RCP6SW: Built-in Controller	WRA14C	WA: Battery-less Absolute	56P: Stepper Motor 56□ Size	16 :16mm 8 : 8mm 4 : 4mm	50:50mm ~ 600:600mm (Every 50mm)	[RCP6W] P3 : PCON MCON MSEL P5 : RCM-P6PC [RCP6SW] SE: SIO Type	N : None P : 1m S : 3m M: 5m X□□ : Specified Length R□□ : Robot Cable	Please refer to the options table below.

* RCP6 does not include a controller. RCP6S includes a built-in controller.
* Please refer to P.20 for more information about the model specification items.

Radial Load Applicable

CE RoHS

Horizontal | Vertical | Side | Ceiling

*Some limitations may apply to horizontal/ side/ceiling mountings depending on the model. See page 204. Please contact IAI for more information.

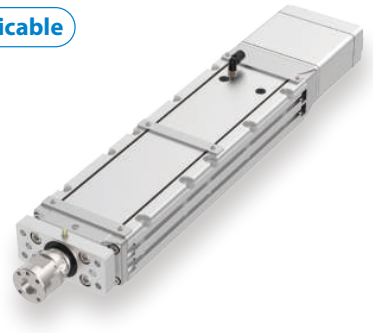

POINT Selection Notes

(1) The maximum acceleration/deceleration is 1G for horizontal, and 0.5G for vertical use.
(2) The actuator specifications displays the payload's maximum value, but it will vary depending on the acceleration and speed. Please refer to the "Selection Guidelines" (Tables of Payload by Speed/Acceleration) on P.240 for more details.
(3) The radial cylinder is equipped with a built-in guide. Please refer to the graphs shown on P.246 and after for the allowable load mass.
(4) Please refer to P205 for performing push-motion operation.
(5) Depending on the ambient operating temperature, duty control is necessary for the RCP6SW (built-in controller type) with lead 4/8/16. Please refer to P.247 for more information.
(6) The cable joint connector is not splash-proofed, so it should be located where there is no splash.
(7) The RCP6SW with built-in controller does not have a teaching tool connection port. Connect the teaching tool to the gateway unit and configure parameter data etc. via the gateway unit.

■ Correlation Diagrams of Speed and Payload

If the ambient temperature is 5°C or below, the speed will be lower than when it exceeds 5°C.

High-output enabled with PCON/MCON/MSEL connected.

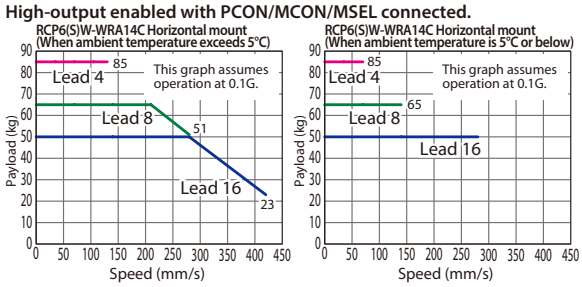

High-output enabled with PCON/MCON/MSEL connected.

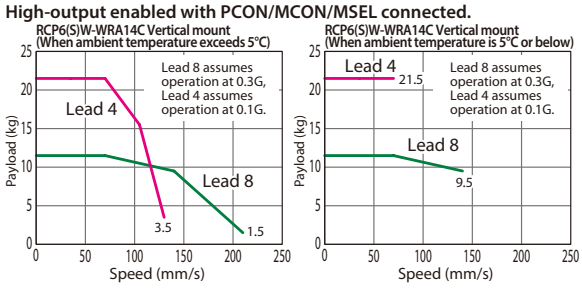

Actuator Specifications

■ Lead and Payload

* Horizontal external guide rail required for horizontal payload.
** Push force only available during push mode w / limited speed.

Model Number	Lead (mm)	Max. Payload Horizontal (kg)*	Max. Payload Vertical (kg)	Max. Push Force (N)**	Stroke (mm)
RCP6(S)W-WRA14C-WA-56P-16-①-②-③-④	16	50	–	273	50~600 (Every 50mm)
RCP6(S)W-WRA14C-WA-56P-8-①-②-③-④	8	65	11.5	547	
RCP6(S)W-WRA14C-WA-56P-4-①-②-③-④	4	85	21.5	1,094	

Legend: ① Stroke ② Applicable controllers/I/O type ③ Cable length ④ Options

■ Stroke and Max Speed (Unit: mm/s)

Lead (mm)	50~600 (Every 50mm)
16	420 [280]
8	280 <210> [140]
4	130 [70]

Values in brackets < > are for vertical use.
Values in brackets [ ] are when ambient temperature is 5°C or below.

① Stroke

Stroke (mm)	RCP6W	RCP6SW	Stroke (mm)	RCP6W	RCP6SW
50	○	○	**350**	○	○
100	○	○	**400**	○	○
150	○	○	**450**	○	○
200	○	○	**500**	○	○
250	○	○	**550**	○	○
300	○	○	**600**	○	○

③ Cable Length

Cable Type	Cable Code	RCP6W P3	RCP6W P5	RCP6SW SE
Standard	**P**(1m)	○	○	○
	S(3m)	○	○	○
	M(5m)	○	○	○
Specified length	**X06** (6m) ~**X10** (10m)	○	○	○
	X11 (11m) ~**X15** (15m)	○	○	○
	X16 (16m) ~**X18** (18m)	○	○	○
Robot cable	**R01** (1m) ~**R03** (3m)	○	○	○
	R04 (4m) ~**R05** (5m)	○	○	○
	R06 (6m) ~**R10** (10m)	○	○	○
	R11 (11m) ~**R15** (15m)	○	○	○
	R16 (16m) ~**R18** (18m)	○	○	○

* Select the length of the actuator cable and the actuator/controller connection cable so that the total is 20m or less.
* Please refer to P. 267 and 283 for more information regarding the maintenance cables.

④ Options

Name	Option Code	Reference Page
Actuator cable length 2m	**Not specified**	See P.197
Actuator cable length 5m	**AC5**	See P.197
Actuator cable length 10m	**AC10**	See P.197
Actuator cable length 15m	**AC15**	See P.197
Brake	**B**	See P.197
Cable exit direction (Bottom)	**CJB**	See P.197
Cable exit direction (Left)	**CJL**	See P.197
Cable exit direction (Right)	**CJR**	See P.197
Cable exit direction (Top)	**CJT**	See P.197
Flange	**FL**	See P.198
Non-motor end specification	**NM**	See P.202
T-slot nut bar (Left)	**NTBL**	See P.202
T-slot nut bar (Right)	**NTBR**	See P.202

Actuator Specifications

Item	Description
Drive system	Ball screw ϕ12mm, rolled C10
Positioning repeatability	±0.01mm
Lost motion	0.1mm or less
Rod	ϕ40mm
Rod non-rotation precision	0 degrees
Allowable load and torque on rod tip	See P. 246
Rod tip overhang distance	150mm or less
Protective structure	IP65 (IEC 60529/JIS C 0920)
Ambient operating temp. & humidity	0~40°C, 85% RH or less (Non-condensing)

Dimensions

CAD drawings can be downloaded from our website.
www.intelligentactuator.com

2D CAD 3D CAD

*1 When the rod is returning to its home position, please be careful of interference from surrounding objects, as it will travel until it reaches the M.E.
M.E: Mechanical end S.E: Stroke end
*2 If the object attached to the rod has a long overhang length, or precise angular adjustment of the object is required, please do not use the reamed hole when the object is attached to the rod.

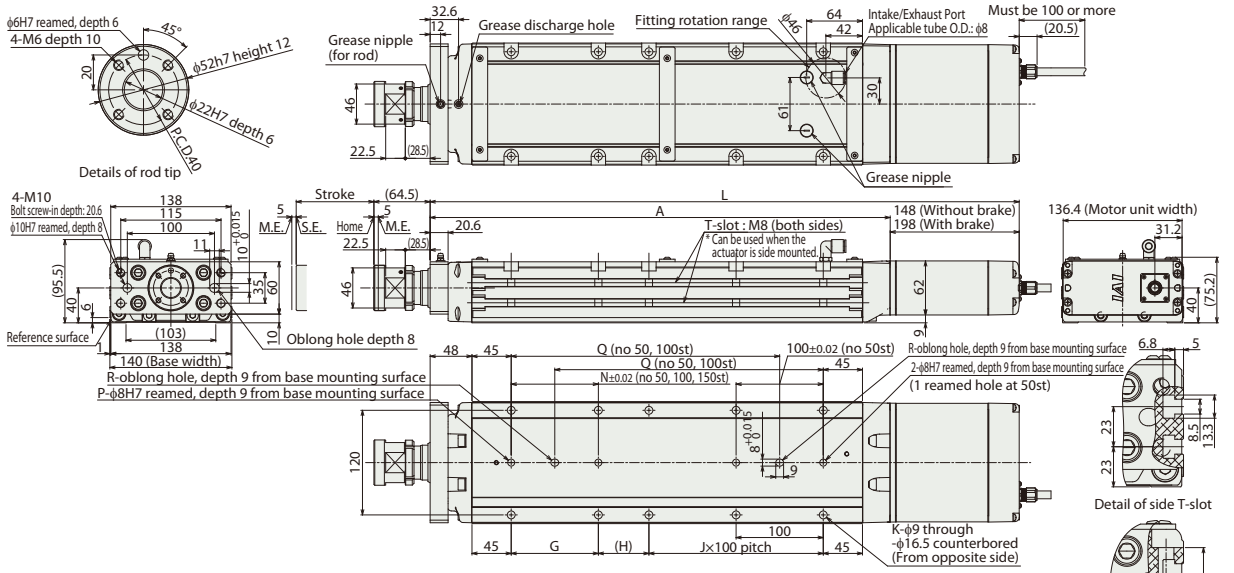

■ RCP6SW-WRA14C

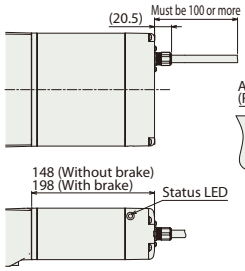

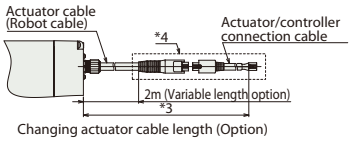

Changing actuator cable length (Option)

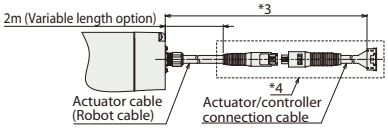

Changing actuator cable length (Option)

*3 Select the length of the actuator cable and the actuator/controller connection cable so that the total is 20m or less.
*4 The cable joint (connector) within the dotted line is not splash-proofed.

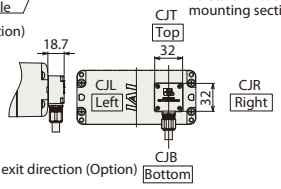

Cable exit direction (Option)

■ Rod Deflection of RCP6(S)W-WRA14C (Reference Values)

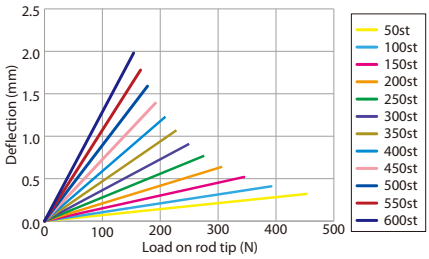

* Please refer to P.254 for more information on component materials.

■ Dimensions and Mass by Stroke

Stroke			50	100	150	200	250	300	350	400	450	500	550	600
L		w/o brake	425.8	475.8	525.8	575.8	625.8	675.8	725.8	775.8	825.8	875.8	925.8	975.8
		w/ brake	475.8	525.8	575.8	625.8	675.8	725.8	775.8	825.8	875.8	925.8	975.8	1,025.8
A			277.8	327.8	377.8	427.8	477.8	527.8	577.8	627.8	677.8	727.8	777.8	827.8
G			-	-	-	100	100	100	100	100	100	100	100	100
H			108	58	108	58	108	58	108	58	108	58	108	58
J			0	1	1	1	1	2	2	3	3	4	4	5
K			4	6	6	8	8	10	10	12	12	14	14	16
N			-	-	-	100	100	100	100	100	100	100	100	100
P			1	1	1	2	2	2	2	2	2	2	2	2
Q			-	-	158	208	258	308	358	408	458	508	558	608
R			0	0	1	1	1	1	1	1	1	1	1	1
Allowable static load on rod tip (N)			454	392	345	307	276	251	229	210	193	179	166	154
Allowable static torque on rod tip (N•m)			30	30	30	30	30	30	30	30	30	30	30	30
3,000km	Allowable dynamic load on rod tip (N)	Load offset 0mm	199	170	148	131	117	104	94	85	77	70	64	58
		Load offset 150mm	100	100	100	100	100	95	87	79	72	66	60	55
	Allowable dynamic torque on rod tip (N•m)		15.0	15.0	15.0	15.0	15.0	14.3	13.0	11.8	10.8	9.9	9.0	8.2
5,000km	Allowable dynamic load on rod tip (N)	Load offset 0mm	167	143	124	109	97	87	78	70	63	57	51	46
		Load offset 150mm	100	100	100	96	87	79	71	65	59	53	48	44
	Allowable dynamic torque on rod tip (N•m)		15.0	15.0	15.0	14.4	13.0	11.8	10.7	9.7	8.8	8.0	7.3	6.6
Mass (kg)	RCP6W	w/o brake	8.9	9.7	10.6	11.5	12.4	13.3	14.2	15.1	16.0	16.9	17.8	18.7
		w/ brake	9.4	10.2	11.1	12.0	12.9	13.8	14.7	15.6	16.5	17.4	18.3	19.2
	RCP6SW	w/o brake	9.0	9.8	10.7	11.6	12.5	13.4	14.3	15.2	16.1	17.0	17.9	18.8
		w/ brake	9.4	10.2	11.1	12.0	12.9	13.8	14.7	15.6	16.5	17.4	18.3	19.2

② Applicable Controllers

The RCP6 series actuators can be operated by the controllers indicated below. Please select the type depending on your intended use. * Please refer to P.271 for more information about the built-in controller of RCP6S series.

Name	External view	Max. number of controlled axes	Input power	Control method: Positioner	Pulse train	Program	Network * Option	Maximum number of positioning points	Reference page
PCON-CYB/PLB/POB		1	DC24V	● * Option	● * Option	–	Network cannot be selected	64	Please contact IAI for more information.
PCON-CB/CGB		1		● * Option	● * Option	–	DeviceNet, CC-Link, PROFIBUS, CompoNet, MECHATROLINK, EtherCAT, EtherNet/IP, PROFINET, SSCNET III/H	512 (768 for network spec.)	See P.255
MCON-C/CG		8		This model is network-compatible only.				256	Please contact IAI for more information.
MCON-LC/LCG		6		–	–	●		256	Please contact IAI for more information.
MSEL-PC/PG		4	Single-phase 100 ~ 230 VAC	–	–	●		30,000	Please contact IAI for more information.
RCM-P6PC		1	Usable within the RCP6S Gateway system.					768	See P.279

Note: · The type of compatible networks will vary depending on the controller. Please refer to reference page for more information.

* For the MCON controller, high-output enabled operation is only available if "high-output setting" is selected as an option. The maximum connectable axes with high-output enabled are C: 4 and LC: 3.

RCP6(S)W-WRA16C

Dust/Splash-Proof Spec | Battery-less Absolute | Motor Unit Type | Coupled Motor | Body Width 160 mm | 24v Stepper Motor

Model Specification Items

Series	Type	Encoder Type	Motor Type	Lead	Stroke	Applicable Controller/I/O Type	Cable Length	Options
	WRA16C	WA	60P					
RCP6W: Separate Controller RCP6SW: Built-in Controller		WA: Battery-less Absolute	60P: Stepper Motor 60□ Size	20 :20mm 10 :10mm 5 : 5mm	50:50mm ~ 800:800mm (Every 50mm)	[RCP6W] P4 : PCON-CFB/CGFB [RCP6SW] SE: SIO Type	N : None P : 1m S : 3m M: 5m X□□ : Specified Length R□□ : Robot Cable	Please refer to the options table below.

* RCP6 does not include a controller. RCP6S includes a built-in controller.
* Please refer to P.20 for more information about the model specification items.

Radial Load Applicable

CE RoHS

Horizontal | Vertical | Side | Ceiling

*Some limitations may apply to horizontal/side/ceiling mountings depending on the model. See page 204. Please contact IAI for more information.

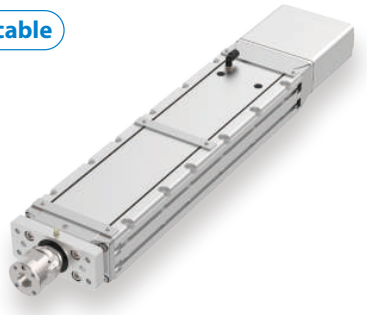

POINT Selection Notes

(1) The maximum acceleration/deceleration is 0.1G for lead 5 and 0.2G for lead 10/20.
(2) The actuator specifications displays the payload's maximum value, but it will vary depending on the acceleration and speed. Please refer to the "Selection Guidelines" (Tables of Payload by Speed/Acceleration) on P.240 for more details.
(3) The radial cylinder is equipped with a built-in guide. Please refer to the graphs shown on P.246 and after for the allowable load mass.
(4) Please refer to P205 for performing push-motion operation.
(5) For RCP6SW (built-in controller type), please limit the duty cycle to 70% or less.
(6) The service life of an actuator with lead 5 varies depending on the payload when using vertically. Please refer to P. 206 for more information.
(7) The cable joint connector is not splash-proofed, so it should be located where there is no splash.
(8) The RCP6SW with built-in controller does not have a teaching tool connection port. Connect the teaching tool to the gateway unit and configure parameter data etc. via the gateway unit.

Correlation Diagrams of Speed and Payload

If the ambient temperature is 5°C or below, the speed will be lower than when it exceeds 5°C.

PCON connected.

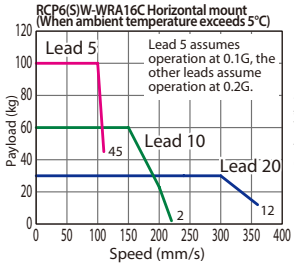

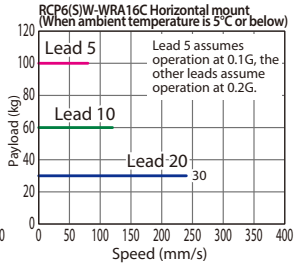

PCON connected.

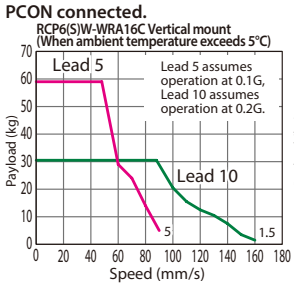

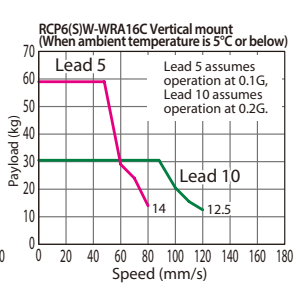

Actuator Specifications

Lead and Payload

* Horizontal external guide rail required for horizontal payload.
** Push force only available during push mode w / limited speed.

Model Number	Lead (mm)	Max. Payload Horizontal (kg)*	Max. Payload Vertical (kg)	Max. Push Force (N)**	Stroke (mm)
RCP6(S)W-WRA16C-WA-60P-20-①-②-③-④	20	30	–	500	50~800 (Every 50mm)
RCP6(S)W-WRA16C-WA-60P-10-①-②-③-④	10	60	30.5	1,000	
RCP6(S)W-WRA16C-WA-60P-5-①-②-③-④	5	100	59	2,000	

Legend: ① Stroke ② Applicable controllers/I/O type ③ Cable length ④ Options

Stroke and Max Speed

(Unit: mm/s)

Lead (mm)	50	100~450 (Every 50mm)	500	550	600	650	700	750	800
20	280 [240]	360 [240]		340 [240]	295 [240]	260 [240]	225 [225]	200 [200]	180 [180]
10	220 <160> [120]		195 <160> [120]	165 <160> [120]	145 [120]	125 [120]	110 [110]	100 [100]	90 [90]
5	110 <90> [80]		95 <90> [80]	80 [80]	70 [70]	60 [60]	55 [55]	50 [50]	45 [45]

Values in brackets < > are for vertical use.
Values in brackets [ ] are when ambient temperature is 5°C or below.

① Stroke

Stroke (mm)	RCP6W	RCP6SW	Stroke (mm)	RCP6W	RCP6SW
50	○	○	**450**	○	○
100	○	○	**500**	○	○
150	○	○	**550**	○	○
200	○	○	**600**	○	○
250	○	○	**650**	○	○
300	○	○	**700**	○	○
350	○	○	**750**	○	○
400	○	○	**800**	○	○

③ Cable Length

Cable Type	Cable Code	RCP6W	RCP6SW
Standard	**P**(1m)	○	○
	S(3m)	○	○
	M(5m)	○	○
Specified length	**X06** (6m) ~**X10** (10m)	○	○
	X11 (11m) ~**X15** (15m)	○	○
	X16 (16m) ~**X18** (18m)	○	○
Robot cable	**R01** (1m) ~**R03** (3m)	○	○
	R04 (4m) ~**R05** (5m)	○	○
	R06 (6m) ~**R10** (10m)	○	○
	R11 (11m) ~**R15** (15m)	○	○
	R16 (16m) ~**R18** (18m)	○	○

* Select the length of the actuator cable and the actuator/controller connection cable so that the total is 20m or less.
* Please refer to P. 267 and 283 for more information regarding the maintenance cables.

④ Options

Name	Option Code	Reference Page
Actuator cable length 2m	**Not specified**	See P.197
Actuator cable length 5m	**AC5**	See P.197
Actuator cable length 10m	**AC10**	See P.197
Actuator cable length 15m	**AC15**	See P.197
Brake	**B**	See P.197
Cable exit direction (Bottom)	**CJB**	See P.197
Cable exit direction (Left)	**CJL**	See P.197
Cable exit direction (Right)	**CJR**	See P.197
Cable exit direction (Top)	**CJT**	See P.197
Flange	**FL**	See P.198
Non-motor end specification	**NM**	See P.202
T-slot nut bar (Left)	**NTBL**	See P.202
T-slot nut bar (Right)	**NTBR**	See P.202

Actuator Specifications

Item	Description
Drive system	Ball screw ϕ16mm, rolled C10
Positioning repeatability	±0.01mm
Lost motion	0.1mm or less
Rod	ϕ45mm
Rod non-rotation precision	0 degrees
Allowable load and torque on rod tip	See P. 246
Rod tip overhang distance	150mm or less
Protective structure	IP65 (IEC 60529/JIS C 0920)
Ambient operating temp. & humidity	0~40°C, 85% RH or less (Non-condensing)

Dimensions

CAD drawings can be downloaded from our website.
www.intelligentactuator.com

2D CAD 3D CAD

*1 When the rod is returning to its home position, please be careful of interference from surrounding objects, as it will travel until it reaches the M.E.
M.E: Mechanical end S.E: Stroke end
*2 If the object attached to the rod has a long overhang length, or precise angular adjustment of the object is required, please do not use the reamed hole when the object is attached to the rod.

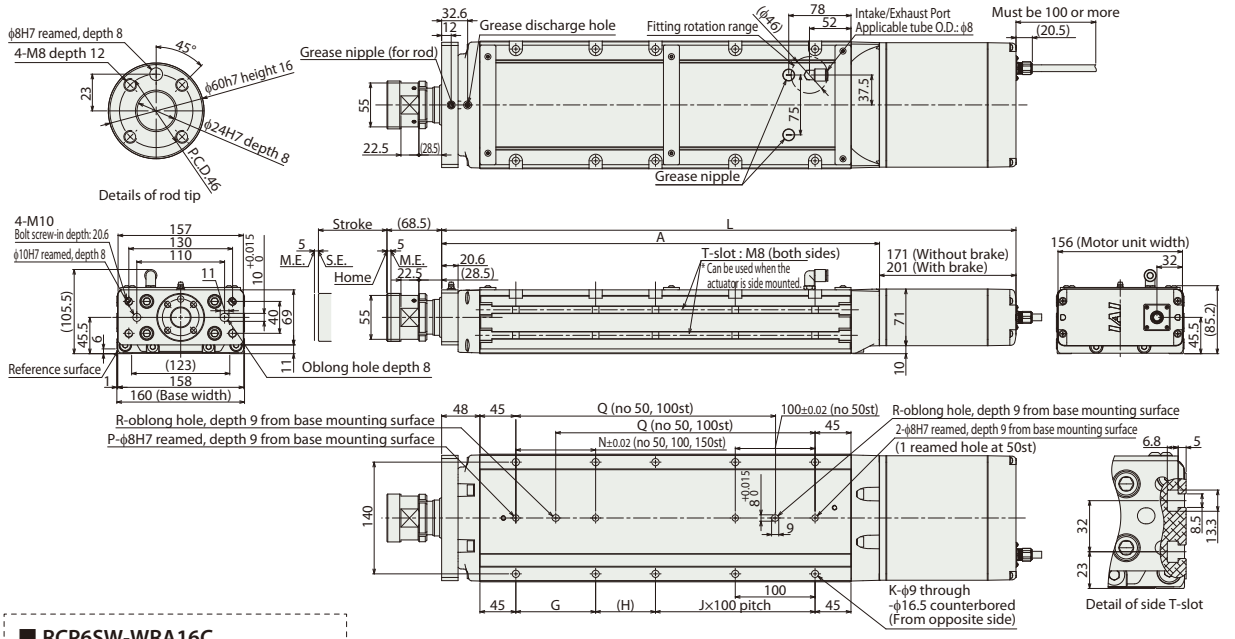

■ RCP6SW-WRA16C

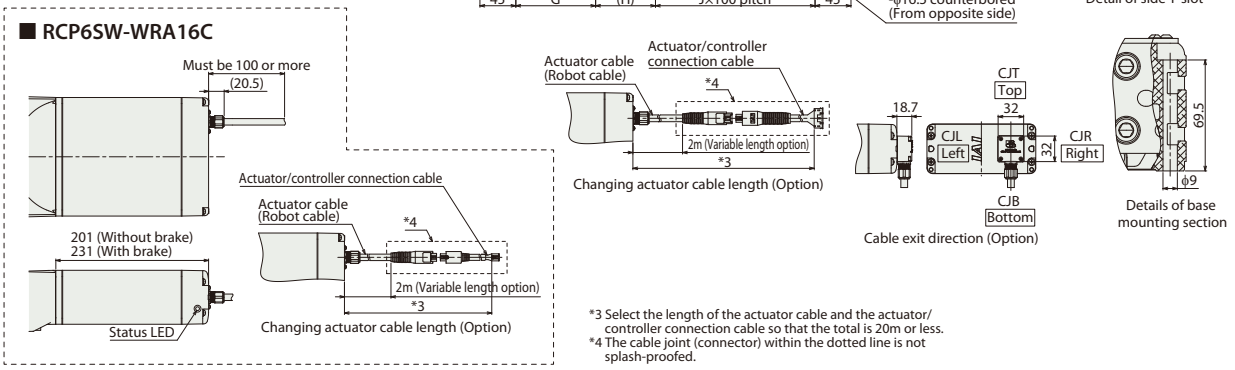

*3 Select the length of the actuator cable and the actuator/controller connection cable so that the total is 20m or less.
*4 The cable joint (connector) within the dotted line is not splash-proofed.

■ Rod Deflection of RCP6(S) W-WRA16C (Reference Values)

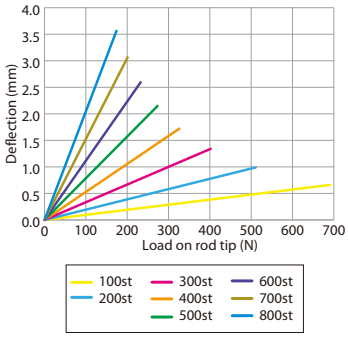

* Please refer to P.254 for more information on component materials.

■ Dimensions and Mass by Stroke

Stroke			50	100	150	200	250	300	350	400	450	500	550	600	650	700	750	800
L	RCP6W	w/o brake	469.8	519.8	569.8	619.8	669.8	719.8	769.8	819.8	869.8	919.8	969.8	1,019.8	1,069.8	1,119.8	1,169.8	1,219.8
		w/ brake	499.8	549.8	599.8	649.8	699.8	749.8	799.8	849.8	899.8	949.8	999.8	1,049.8	1,099.8	1,149.8	1,199.8	1,249.8
	RCP6SW	w/o brake	499.8	549.8	599.8	649.8	699.8	749.8	799.8	849.8	899.8	949.8	999.8	1,049.8	1,099.8	1,149.8	1,199.8	1,249.8
		w/ brake	529.8	579.8	629.8	679.8	729.8	779.8	829.8	879.8	929.8	979.8	1,029.8	1,079.8	1,129.8	1,179.8	1,229.8	1,279.8
A			298.8	348.8	398.8	448.8	498.8	548.8	598.8	648.8	698.8	748.8	798.8	848.8	898.8	948.8	998.8	1,048.8
G			-	-	-	100	100	100	100	100	100	100	100	100	100	100	100	100
H			125	75	125	75	125	75	125	75	125	75	125	75	125	75	125	75
J			0	1	1	1	1	2	2	3	3	4	4	5	5	6	6	7
K			4	6	6	8	8	10	10	12	12	14	14	16	16	18	18	20
N			-	-	-	100	100	100	100	100	100	100	100	100	100	100	100	100
P			1	1	1	2	2	2	2	2	2	2	2	2	2	2	2	2
Q			-	-	175	225	275	325	375	425	475	525	575	625	675	725	775	825
R			0	0	1	1	1	1	1	1	1	1	1	1	1	1	1	1
Allowable static load on rod tip (N)			588	588	588	511	451	402	362	329	300	275	254	235	217	202	188	176
Allowable static torque on rod tip (N•m)			40	40	40	40	40	40	40	40	40	40	40	40	40	40	40	40
3,000km	Allowable dynamic load on rod tip (N)	Load offset 0mm	255	220	191	168	149	134	120	109	99	90	81	74	67	61	55	50
		Load offset 150mm	133	133	133	133	133	122	111	101	92	84	77	70	64	58	53	48
	Allowable dynamic torque on rod tip (N•m)		20.0	20.0	20.0	20.0	20.0	18.3	16.7	15.2	13.8	12.6	11.5	10.5	9.6	8.7	7.9	7.1
5,000km	Allowable dynamic load on rod tip (N)	Load offset 0mm	214	184	160	140	124	111	99	89	80	72	65	59	53	47	42	37
		Load offset 150mm	133	133	133	124	112	101	91	83	75	68	62	56	50	45	40	36
	Allowable dynamic torque on rod tip (N•m)		20.0	20.0	20.0	18.6	16.8	15.2	13.7	12.4	11.3	10.2	9.2	8.4	7.5	6.8	6.0	5.3
Mass (kg)	RCP6W	w/o brake	12.4	13.6	14.8	15.9	17.0	18.2	19.3	20.5	21.6	22.8	23.9	25.1	26.2	27.4	28.5	29.7
		w/ brake	12.9	14.1	15.3	16.4	17.5	18.7	19.8	21.0	22.1	23.3	24.4	25.6	26.7	27.9	29.0	30.2
	RCP6SW	w/o brake	12.5	13.7	14.9	16.0	17.1	18.3	19.4	20.6	21.7	22.9	24.0	25.2	26.3	27.5	28.6	29.8
		w/ brake	13.0	14.2	15.4	16.5	17.6	18.8	19.9	21.1	22.2	23.4	24.5	25.7	26.8	28.0	29.1	30.3

② Applicable Controllers

The RCP6 series actuators can be operated by the controllers indicated below. Please select the type depending on your intended use. * Please refer to P.271 for more information about the built-in controller of RCP6S series.

Name	External view	Max. number of controlled axes	Input power	Control method: Positioner	Pulse train	Program	Network * Option	Maximum number of positioning points	Reference page
PCON-CFB/CGFB		1	DC24V	● * Option	● * Option	–	DeviceNet CC-Link PROFIBUS CompoNet MECHATROLINK EtherCAT EtherNet/IP PROFINET	512 (768 for network spec.)	See P.255

RCP6(S)W-WRA10R

Dust/Splash-Proof Spec | Battery-less Absolute | Motor Unit Type | Side-mounted Motor | Body Width 100* mm | 24v Stepper Motor

Model Specification Items

Series	Type	Encoder Type	Motor Type	Lead	Stroke	Applicable Controller/I/O Type	Cable Length	Options
RCP6W: Separate Controller RCP6SW: Built-in Controller	WRA10R	WA: Battery-less Absolute	35P: Stepper Motor 35□ Size	10 : 10mm 5 : 5mm 2.5 : 2.5mm	50:50mm ~ 500:500mm (Every 50mm)	[RCP6W] P3 : PCON MCON MSEL P5 : RCM-P6PC [RCP6SW] SE: SIO Type	N : None P : 1m S : 3m M: 5m X□□ : Specified Length R□□ : Robot Cable	Please refer to the options table below. * Please make sure to specify either ML or MR when ordering the side-mounted motor type.

* Body width does not include the width of the side-mounted motor.

* RCP6 does not include a controller. RCP6S includes a built-in controller.
* Please refer to P.20 for more information about the model specification items.

Radial Load Applicable

CE RoHS

Horizontal | Vertical | Side | Ceiling

*Some limitations may apply to horizontal/ side/ceiling mountings depending on the model. See page 204. Please contact IAI for more information.

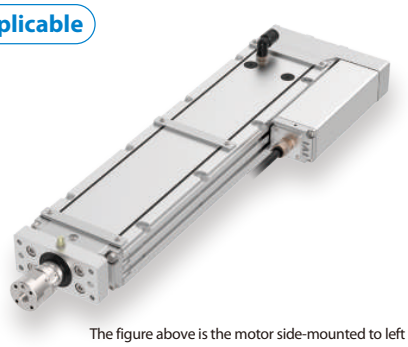

The figure above is the motor side-mounted to left (ML).

POINT Selection Notes

(1) The maximum acceleration/deceleration is 1G for horizontal, and 0.5G for vertical use.
(2) The actuator specifications displays the payload's maximum value, but it will vary depending on the acceleration and speed. Please refer to the "Selection Guidelines" (Tables of Payload by Speed/Acceleration) on P.241 for more details.
(3) The radial cylinder is equipped with a built-in guide. Please refer to the graphs shown on P.246 and after for the allowable load mass.
(4) Please refer to P205 for performing push-motion operation.
(5) The cable joint connector is not splash-proofed, so it should be located where there is no splash.
(6) The RCP6SW with built-in controller does not have a teaching tool connection port. Connect the teaching tool to the gateway unit and configure parameter data etc. via the gateway unit.

Correlation Diagrams of Speed and Payload

If the ambient temperature is 5°C or below, the speed will be lower than when it exceeds 5°C.

High-output enabled with PCON/MCON/MSEL connected.

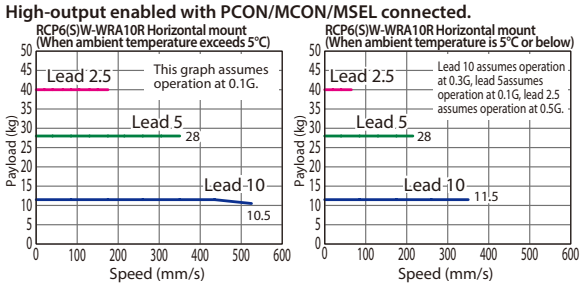

High-output enabled with PCON/MCON/MSEL connected.

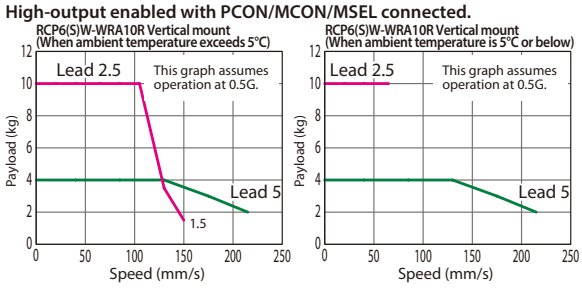

Actuator Specifications

Lead and Payload

* Horizontal external guide rail required for horizontal payload.
** Push force only available during push mode w / limited speed.

Model Number	Lead (mm)	Max. Payload Horizontal (kg)*	Max. Payload Vertical (kg)	Max. Push Force (N)**	Stroke (mm)
RCP6(S)W-WRA10R-WA-35P-10-①-②-③-④	10	11.5	–	77	50~500 (Every 50mm)
RCP6(S)W-WRA10R-WA-35P-5-①-②-③-④	5	28	4	155	
RCP6(S)W-WRA10R-WA-35P-2.5-①-②-③-④	2.5	40	10	310	

Legend: ① Stroke ② Applicable controllers/I/O type ③ Cable length ④ Options

Stroke and Max Speed (Unit: mm/s)

Lead (mm)	50~400 (Every 50mm)	450	500
10	525 [350]		490 [350]
5	350 <215> [215]	290 <215> [215]	240 <215> [215]
2.5	175 <150> [65]	145 [65]	120 [65]

Values in brackets < > are for vertical use.
Values in brackets [ ] are when ambient temperature is 5°C or below.

① Stroke

Stroke (mm)	RCP6W	RCP6SW	Stroke (mm)	RCP6W	RCP6SW
50	○	○	**300**	○	○
100	○	○	**350**	○	○
150	○	○	**400**	○	○
200	○	○	**450**	○	○
250	○	○	**500**	○	○

③ Cable Length

Cable Type	Cable Code	RCP6W P3	RCP6W P5	RCP6SW SE
Standard	**P**(1m)	○	○	○
	S(3m)	○	○	○
	M(5m)	○	○	○
Specified length	**X06** (6m) ~**X10** (10m)	○	○	○
	X11 (11m) ~**X15** (15m)	○	○	○
	X16 (16m) ~**X18** (18m)	○	○	○
Robot cable	**R01** (1m) ~**R03** (3m)	○	○	○
	R04 (4m) ~**R05** (5m)	○	○	○
	R06 (6m) ~**R10** (10m)	○	○	○
	R11 (11m) ~**R15** (15m)	○	○	○
	R16 (16m) ~**R18** (18m)	○	○	○

* Select the length of the actuator cable and the actuator/controller connection cable so that the total is 20m or less.
* Please refer to P. 267 and 283 for more information regarding the maintenance cables.

④ Options

Name	Option Code	Reference Page
Actuator cable length 2m	**Not specified**	See P.197
Actuator cable length 5m	**AC5**	See P.197
Actuator cable length 10m	**AC10**	See P.197
Actuator cable length 15m	**AC15**	See P.197
Brake	**B**	See P.197
Cable exit direction (Bottom)	**CJB**	See P.197
Cable exit direction (Outside)	**CJO**	See P.197
Cable exit direction (Top)	**CJT**	See P.197
Flange	**FL**	See P.198
Motor side-mounted to left (standard)	**ML**	See P.201
Motor side-mounted to right	**MR**	See P.201
Non-motor end specification	**NM**	See P.202
T-slot nut bar (Left)	**NTBL**	See P.202
T-slot nut bar (Right)	**NTBR**	See P.202

* Be sure to confirm with the "Selection Notes (P.204)" when selecting options.

Actuator Specifications

Item	Description
Drive system	Ball screw ϕ8mm, rolled C10
Positioning repeatability	±0.01mm
Lost motion	0.1mm or less
Rod	ϕ25mm
Rod non-rotation precision	0 degrees
Allowable load and torque on rod tip	See P. 246
Rod tip overhang distance	100mm or less
Protective structure	IP65 (IEC 60529/JIS C 0920)
Ambient operating temp. & humidity	0~40°C, 85% RH or less (Non-condensing)

Dimensions

CAD drawings can be downloaded from our website.
www.intelligentactuator.com
2D CAD 3D CAD

*1 When the rod is returning to its home position, please be careful of interference from surrounding objects, as it will travel until it reaches the M.E.
M.E: Mechanical end S.E: Stroke end
*2 If the object attached to the rod has a long overhang length, or precise angular adjustment of the object is required, please do not use the reamed hole when the object is attached to the rod.

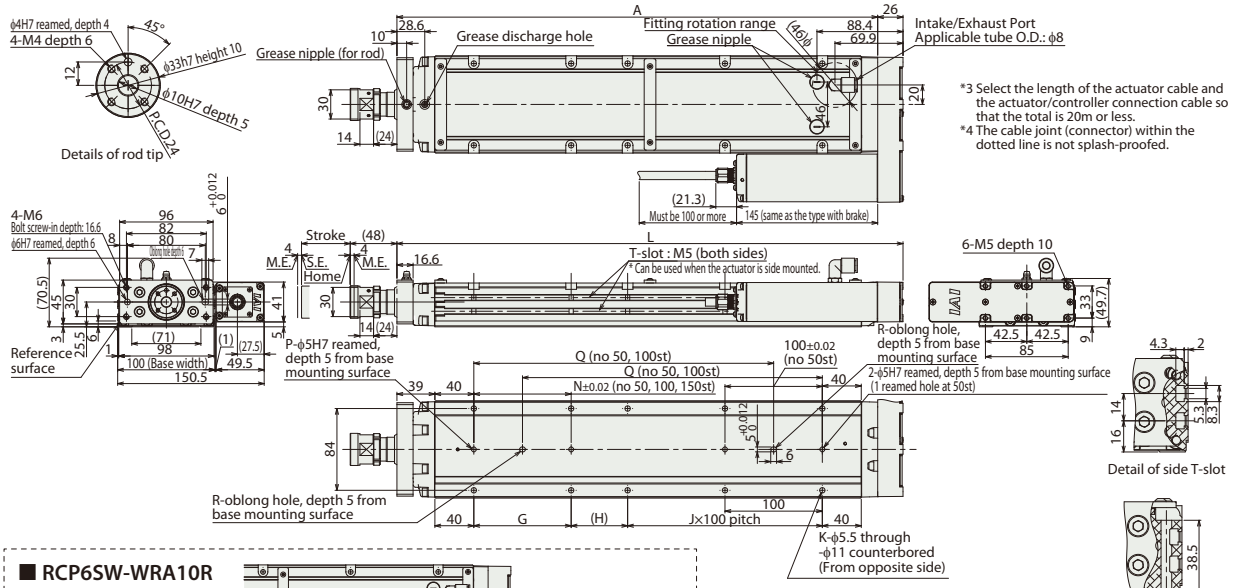

■ RCP6SW-WRA10R

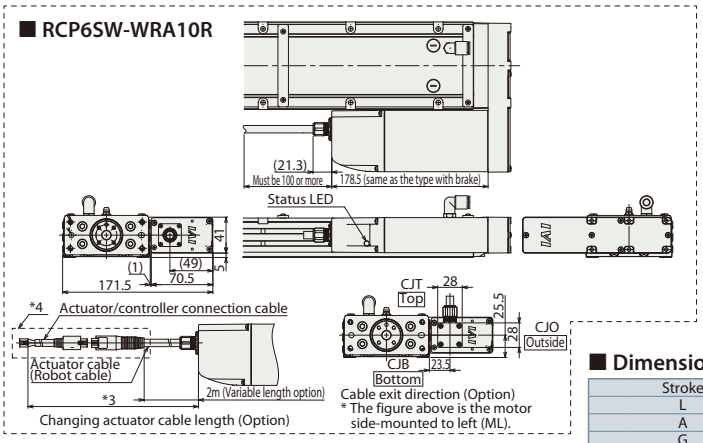

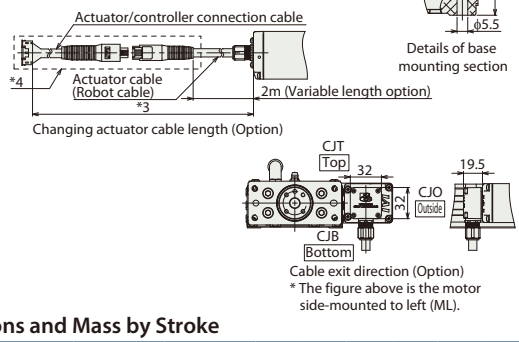

■ Rod Deflection of RCP6(S)W-WRA10R (Reference Values)

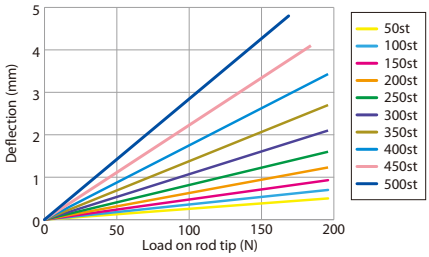

* Please refer to P.253 for more information on component materials.

■ Dimensions and Mass by Stroke

Stroke			50	100	150	200	250	300	350	400	450	500
L			269.9	319.9	369.9	419.9	469.9	519.9	569.9	619.9	669.9	719.9
A			243.9	293.9	343.9	393.9	443.9	493.9	543.9	593.9	643.9	693.9
G			-	-	-	100	100	100	100	100	100	100
H			108	58	108	58	108	58	108	58	108	58
J			0	1	1	1	1	2	2	3	3	4
K			4	6	6	8	8	10	10	12	12	14
N			-	-	-	100	100	100	100	100	100	100
P			1	1	1	2	2	2	2	2	2	2
Q			-	-	158	208	258	308	358	408	458	508
R			0	0	1	1	1	1	1	1	1	1
Allowable static load on rod tip (N)			196	196	196	196	196	196	196	196	184	169
Allowable static torque on rod tip (N•m)			10	10	10	10	10	10	10	10	10	10
3,000km	Allowable dynamic load on rod tip (N)	Load offset 0mm	98	98	98	95	85	76	68	62	57	52
		Load offset 100mm	50	50	50	50	50	50	50	50	50	49
	Allowable dynamic torque on rod tip (N•m)		5.0	5.0	5.0	5.0	5.0	5.0	5.0	5.0	5.0	4.9
5,000km	Allowable dynamic load on rod tip (N)	Load offset 0mm	98	98	91	80	71	63	57	52	47	43
		Load offset 100mm	50	50	50	50	50	50	50	48	44	40
	Allowable dynamic torque on rod tip (N•m)		5.0	5.0	5.0	5.0	5.0	5.0	5.0	4.8	4.4	4.0
Mass (kg)	RCP6W	w/o brake	3.8	4.2	4.7	5.1	5.6	6.0	6.5	6.9	7.4	7.8
		w/ brake	3.9	4.3	4.8	5.2	5.7	6.1	6.6	7.0	7.5	7.9
	RCP6SW	w/o brake	4.0	4.4	4.9	5.3	5.8	6.2	6.7	7.1	7.6	8.0
		w/ brake	4.1	4.5	5.0	5.4	5.9	6.3	6.8	7.2	7.7	8.1

② Applicable Controllers

The RCP6 series actuators can be operated by the controllers indicated below. Please select the type depending on your intended use. * Please refer to P.271 for more information about the built-in controller of RCP6S series.

Name	External view	Max. number of controlled axes	Input power	Control method: Positioner	Pulse train	Program	Network * Option	Maximum number of positioning points	Reference page
PCON-CYB/PLB/POB		1	DC24V	● * Option	● * Option	–	Network cannot be selected	64	Please contact IAI for more information.
PCON-CB/CGB		1		● * Option	● * Option	–	DeviceNet, CC-Link, PROFIBUS, CompoNet, MECHATROLINK, EtherCAT, EtherNet/IP, PROFINET, SSCNET III/H	512 (768 for network spec.)	See P.255
MCON-C/CG		8		This model is network-compatible only.				256	Please contact IAI for more information.
MCON-LC/LCG		6		–	–	●		256	Please contact IAI for more information.
MSEL-PC/PG		4	Single-phase 100 ~ 230 VAC	–	–	●		30,000	Please contact IAI for more information.
RCM-P6PC		1	Usable within the RCP6S Gateway system.					768	See P.279

Note: · The type of compatible networks will vary depending on the controller. Please refer to reference page for more information.

* For the MCON controller, high-output enabled operation is only available if "high-output setting" is selected as an option. The maximum connectable axes with high-output enabled are C: 4 and LC: 3.

RCP6(S)W-WRA12R

Dust/Splash-Proof Spec | Battery-less Absolute | Motor Unit Type | Side-mounted Motor | Body Width 120* mm | 24v Stepper Motor

■ Model Specification Items

Series	Type	Encoder Type	Motor Type	Lead	Stroke	Applicable Controller/I/O Type	Cable Length	Options
RCP6W: Separate Controller RCP6SW: Built-in Controller	WRA12R	WA: Battery-less Absolute	42P: Stepper Motor 42□ Size	12 :12mm 6 : 6mm 3 : 3mm	50:50mm ~ 500:500mm (Every 50mm)	[RCP6W] P3 : PCON MCON MSEL P5 : RCM-P6PC [RCP6SW] SE: SIO Type	N : None P : 1m S : 3m M: 5m X□□ : Specified Length R□□ : Robot Cable	Please refer to the options table below. * Please make sure to specify either ML or MR when ordering the side-mounted motor type.

* Body width does not include the width of the side-mounted motor.

* RCP6 does not include a controller. RCP6S includes a built-in controller.
* Please refer to P.20 for more information about the model specification items.

Radial Load Applicable

CE RoHS

Horizontal | Vertical | Side | Ceiling

*Some limitations may apply to horizontal/side/ceiling mountings depending on the model. See page 204. Please contact IAI for more information.

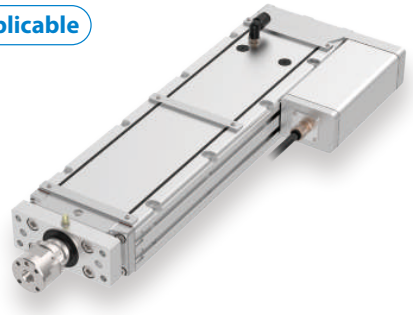

The figure above is the motor side-mounted to left (ML).

POINT Selection Notes

(1) The maximum acceleration/deceleration is 1G for horizontal, and 0.5G for vertical use.
(2) The actuator specifications displays the payload's maximum value, but it will vary depending on the acceleration and speed. Please refer to the "Selection Guidelines" (Tables of Payload by Speed/Acceleration) on P.241 for more details.
(3) The radial cylinder is equipped with a built-in guide. Please refer to the graphs shown on P.246 and after for the allowable load mass.
(4) Please refer to P205 for performing push-motion operation.
(5) Depending on the ambient operating temperature, duty control is necessary for the RCP6SW (built-in controller type) with lead 3/6. Please refer to P.247 for more information.
(6) The cable joint connector is not splash-proofed, so it should be located where there is no splash.
(7) The RCP6SW with built-in controller does not have a teaching tool connection port. Connect the teaching tool to the gateway unit and configure parameter data etc. via the gateway unit.

■ Correlation Diagrams of Speed and Payload

If the ambient temperature is 5°C or below, the speed will be lower than when it exceeds 5°C.

High-output enabled with PCON/MCON/MSEL connected.

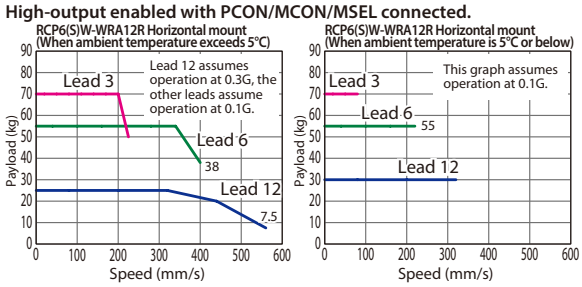

High-output enabled with PCON/MCON/MSEL connected.

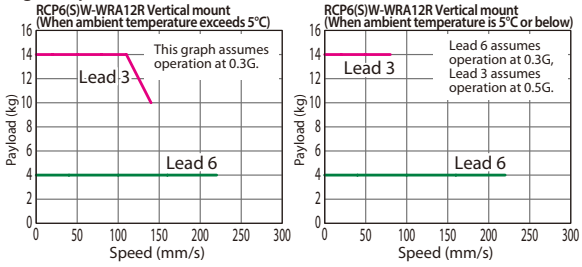

Actuator Specifications

■ Lead and Payload

* Horizontal external guide rail required for horizontal payload.
** Push force only available during push mode w / limited speed.

Model Number	Lead (mm)	Max. Payload Horizontal (kg)*	Max. Payload Vertical (kg)	Max. Push Force (N)**	Stroke (mm)
RCP6(S)W-WRA12R-WA-42P-12-①-②-③-④	12	30	–	93	50~500 (Every 50mm)
RCP6(S)W-WRA12R-WA-42P-6-①-②-③-④	6	55	4	185	
RCP6(S)W-WRA12R-WA-42P-3-①-②-③-④	3	70	14	370	

Legend: ① Stroke ② Applicable controllers/I/O type ③ Cable length ④ Options

■ Stroke and Max Speed (Unit: mm/s)

Lead (mm)	50~400 (Every 50mm)	450	500
12	560 [320]		
6	400 <220> [220]		375 <220> [220]
3	225 <140> [80]	220 <140> [80]	185 <140> [80]

Values in brackets < > are for vertical use.
Values in brackets [ ] are when ambient temperature is 5°C or below.

① Stroke

Stroke (mm)	RCP6W	RCP6SW	Stroke (mm)	RCP6W	RCP6SW
50	○	○	**300**	○	○
100	○	○	**350**	○	○
150	○	○	**400**	○	○
200	○	○	**450**	○	○
250	○	○	**500**	○	○

③ Cable Length

Cable Type	Cable Code	RCP6W P3	RCP6W P5	RCP6SW SE
Standard	**P**(1m)	○	○	○
	S(3m)	○	○	○
	M(5m)	○	○	○
Specified length	**X06** (6m) ~**X10** (10m)	○	○	○
	X11 (11m) ~**X15** (15m)	○	○	○
	X16 (16m) ~**X18** (18m)	○	○	○
Robot cable	**R01** (1m) ~**R03** (3m)	○	○	○
	R04 (4m) ~**R05** (5m)	○	○	○
	R06 (6m) ~**R10** (10m)	○	○	○
	R11 (11m) ~**R15** (15m)	○	○	○
	R16 (16m) ~**R18** (18m)	○	○	○

* Select the length of the actuator cable and the actuator/controller connection cable so that the total is 20m or less.
* Please refer to P. 267 and 283 for more information regarding the maintenance cables.

④ Options

Name	Option Code	Reference Page
Actuator cable length 2m	**Not specified**	See P.197
Actuator cable length 5m	**AC5**	See P.197
Actuator cable length 10m	**AC10**	See P.197
Actuator cable length 15m	**AC15**	See P.197
Brake	**B**	See P.197
Cable exit direction (Bottom)	**CJB**	See P.197
Cable exit direction (Outside)	**CJO**	See P.197
Cable exit direction (Top)	**CJT**	See P.197
Flange	**FL**	See P.198
Motor side-mounted to left (standard)	**ML**	See P.201
Motor side-mounted to right	**MR**	See P.201
Non-motor end specification	**NM**	See P.202
T-slot nut bar (Left)	**NTBL**	See P.202
T-slot nut bar (Right)	**NTBR**	See P.202

* Be sure to confirm with the "Selection Notes (P.204)" when selecting options.

Actuator Specifications

Item	Description
Drive system	Ball screw ϕ10mm, rolled C10
Positioning repeatability	±0.01mm
Lost motion	0.1mm or less
Rod	ϕ30mm
Rod non-rotation precision	0 degrees
Allowable load and torque on rod tip	See P. 246
Rod tip overhang distance	100mm or less
Protective structure	IP65 (IEC 60529/JIS C 0920)
Ambient operating temp. & humidity	0~40°C, 85% RH or less (Non-condensing)

Dimensions

CAD drawings can be downloaded from our website.
www.intelligentactuator.com

2D CAD 3D CAD

*1 When the rod is returning to its home position, please be careful of interference from surrounding objects, as it will travel until it reaches the M.E.
M.E: Mechanical end S.E: Stroke end
*2 If the object attached to the rod has a long overhang length, or precise angular adjustment of the object is required, please do not use the reamed hole when the object is attached to the rod.

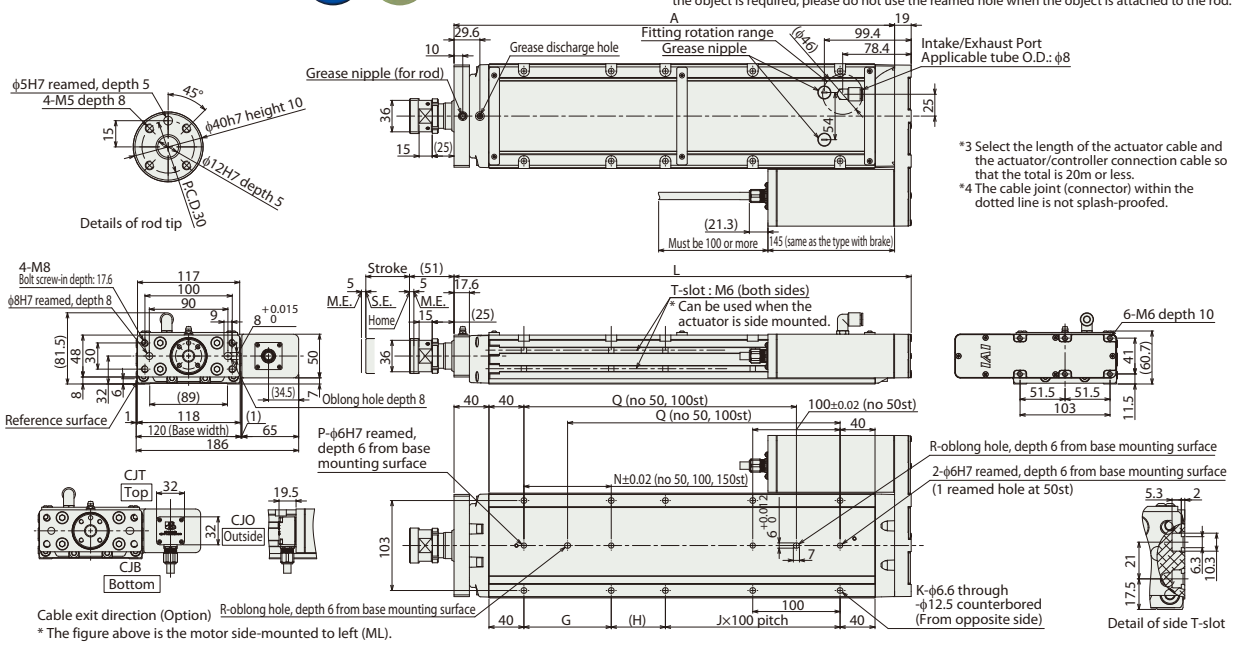

■ RCP6SW-WRA12R

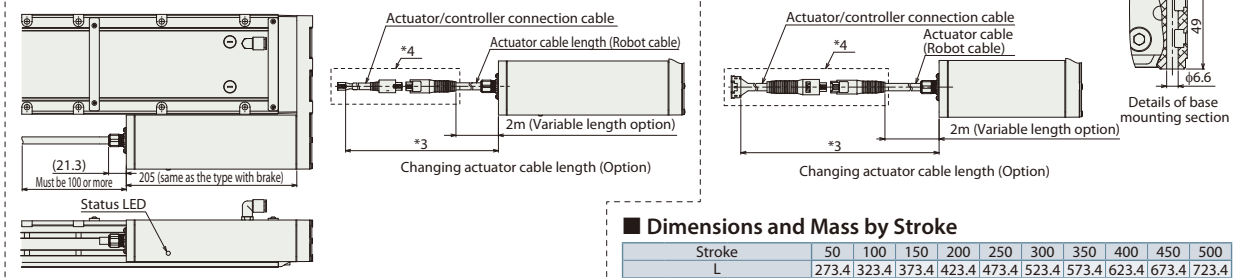

■ Rod Deflection of RCP6(S)W-WRA12R (Reference Values)

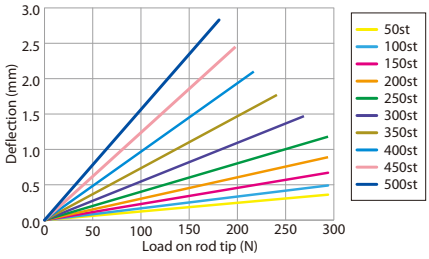

* Please refer to P.254 for more information on component materials.

■ Dimensions and Mass by Stroke

Stroke			50	100	150	200	250	300	350	400	450	500
L			273.4	323.4	373.4	423.4	473.4	523.4	573.4	623.4	673.4	723.4
A			254.4	304.4	354.4	404.4	454.4	504.4	554.4	604.4	654.4	704.4
G			-	-	-	100	100	100	100	100	100	100
H			112	62	112	62	112	62	112	62	112	62
J			0	1	1	1	1	2	2	3	3	4
K			4	6	6	8	8	10	10	12	12	14
N			-	-	-	100	100	100	100	100	100	100
P			1	1	1	2	2	2	2	2	2	2
Q			-	-	162	212	262	312	362	412	462	512
R			0	0	1	1	1	1	1	1	1	1
Allowable static load on rod tip (N)			294	294	294	294	294	269	241	218	198	181
Allowable static torque on rod tip (N•m)			20	20	20	20	20	20	20	20	20	20
3,000km	Allowable dynamic load on rod tip (N)	Load offset 0mm	147	147	137	121	107	96	87	79	72	65
		Load offset 100mm	100	100	100	100	99	90	82	75	68	63
	Allowable dynamic torque on rod tip (N•m)		10.0	10.0	10.0	10.0	9.9	9.0	8.2	7.5	6.8	6.3
5,000km	Allowable dynamic load on rod tip (N)	Load offset 0mm	147	133	115	101	90	80	72	65	59	54
		Load offset 100mm	100	100	100	92	83	75	68	62	56	51
	Allowable dynamic torque on rod tip (N•m)		10.0	10.0	10.0	9.2	8.3	7.5	6.8	6.2	5.6	5.1
Mass (kg)	RCP6W	w/o brake	5.4	6.0	6.7	7.3	8.0	8.6	9.3	9.9	10.6	11.2
		w/ brake	5.5	6.1	6.8	7.4	8.1	8.7	9.4	10.0	10.7	11.3
	RCP6SW	w/o brake	5.5	6.1	6.8	7.4	8.1	8.7	9.4	10.0	10.7	11.3
		w/ brake	5.6	6.2	6.9	7.5	8.2	8.8	9.5	10.1	10.8	11.4

② Applicable Controllers

The RCP6 series actuators can be operated by the controllers indicated below. Please select the type depending on your intended use. * Please refer to P.271 for more information about the built-in controller of RCP6S series.

Name	External view	Max. number of controlled axes	Input power	Control method: Positioner	Pulse train	Program	Network * Option	Maximum number of positioning points	Reference page
PCON-CYB/PLB/POB		1	DC24V	● * Option	● * Option	–	Network cannot be selected	64	Please contact IAI for more information.
PCON-CB/CGB		1		● * Option	● * Option	–	DeviceNet, CC-Link, PROFIBUS, CompoNet, MECHATROLINK, EtherCAT, EtherNet/IP, PROFINET, SSCNET III/H	512 (768 for network spec.)	See P.255
MCON-C/CG		8		This model is network-compatible only.				256	Please contact IAI for more information.
MCON-LC/LCG		6		–	–	●		256	Please contact IAI for more information.
MSEL-PC/PG		4	Single-phase 100 ~ 230 VAC	–	–	●		30,000	Please contact IAI for more information.
RCM-P6PC		1	Usable within the RCP6S Gateway system.					768	See P.279

Note: · The type of compatible networks will vary depending on the controller. Please refer to reference page for more information.

* For the MCON controller, high-output enabled operation is only available if "high-output setting" is selected as an option. The maximum connectable axes with high-output enabled are C: 4 and LC: 3.

RCP6(S)W-WRA14R

Dust/Splash-Proof Spec | Battery-less Absolute | Motor Unit Type | Side-mounted Motor | Body Width 140* mm | 24v Stepper Motor

Model Specification Items

Series	Type	Encoder Type	Motor Type	Lead	Stroke	Applicable Controller/I/O Type	Cable Length	Options
RCP6W: Separate Controller RCP6SW: Built-in Controller	WRA14R	WA: Battery-less Absolute	56P: Stepper Motor 56□ Size	16 :16mm 8 : 8mm 4 : 4mm	50:50mm ~ 600:600mm (Every 50mm)	[RCP6W] P3 : PCON MCON MSEL P5 : RCM-P6PC [RCP6SW] SE: SIO Type	N : None P : 1m S : 3m M: 5m X□□ : Specified Length R□□ : Robot Cable	Please refer to the options table below. * Please make sure to specify either ML or MR when ordering the side-mounted motor type.

* Body width does not include the width of the side-mounted motor.

* RCP6 does not include a controller. RCP6S includes a built-in controller.
* Please refer to P.20 for more information about the model specification items.

Radial Load Applicable

CE RoHS

Horizontal | Vertical | Side | Ceiling

*Some limitations may apply to horizontal/ side/ceiling mountings depending on the model. See page 204. Please contact IAI for more information.

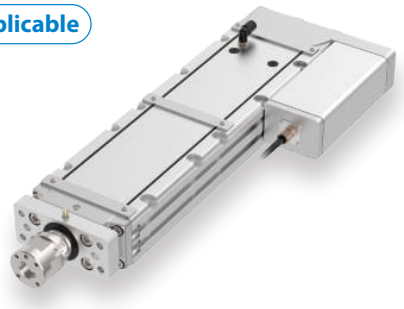

The figure above is the motor side-mounted to left (ML).

POINT Selection Notes

(1) The maximum acceleration/deceleration is 1G for horizontal, and 0.5G for vertical use.
(2) The actuator specifications displays the payload's maximum value, but it will vary depending on the acceleration and speed. Please refer to the "Selection Guidelines" (Tables of Payload by Speed/Acceleration) on P.242 for more details.
(3) The radial cylinder is equipped with a built-in guide. Please refer to the graphs shown on P.245 and after for the allowable load mass.
(4) Please refer to P205 for performing push-motion operation.
(5) Depending on the ambient operating temperature, duty control is necessary for the RCP6SW (built-in controller type) with lead 4/8/16. Please refer to P.247 for more information.
(6) The cable joint connector is not splash-proofed, so it should be located where there is no splash.
(7) The RCP6SW with built-in controller does not have a teaching tool connection port. Connect the teaching tool to the gateway unit and configure parameter data etc. via the gateway unit.

Correlation Diagrams of Speed and Payload

If the ambient temperature is 5°C or below, the speed will be lower than when it exceeds 5°C.

High-output enabled with PCON/MCON/MSEL connected.

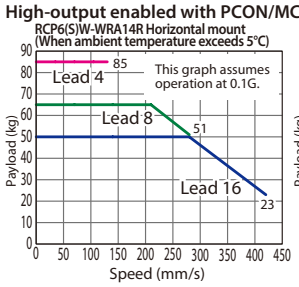

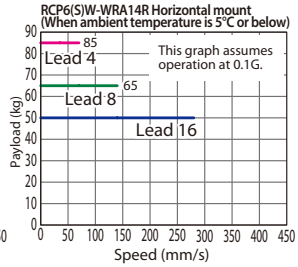

High-output enabled with PCON/MCON/MSEL connected.

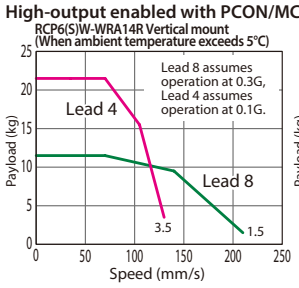

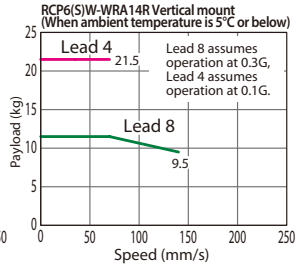

Actuator Specifications

Lead and Payload

* Horizontal external guide rail required for horizontal payload.
** Push force only available during push mode w / limited speed.

Model Number	Lead (mm)	Max. Payload Horizontal (kg)*	Max. Payload Vertical (kg)	Max. Push Force (N)**	Stroke (mm)
RCP6(S)W-WRA14R-WA-56P-16-①-②-③-④	16	50	–	273	50~600 (Every 50mm)
RCP6(S)W-WRA14R-WA-56P-8-①-②-③-④	8	65	11.5	547	
RCP6(S)W-WRA14R-WA-56P-4-①-②-③-④	4	85	21.5	1,094	

Legend: ① Stroke ② Applicable controllers/I/O type ③ Cable length ④ Options

Stroke and Max Speed (Unit: mm/s)

Lead (mm)	50~600 (Every 50mm)
16	420 [280]
8	280 <210> [140]
4	130 [70]

Values in brackets < > are for vertical use.
Values in brackets [ ] are when ambient temperature is 5°C or below.

① Stroke

Stroke (mm)	RCP6W	RCP6SW	Stroke (mm)	RCP6W	RCP6SW
50	○	○	**350**	○	○
100	○	○	**400**	○	○
150	○	○	**450**	○	○
200	○	○	**500**	○	○
250	○	○	**550**	○	○
300	○	○	**600**	○	○

③ Cable Length

Cable Type	Cable Code	RCP6W P3	RCP6W P5	RCP6SW SE
Standard	**P**(1m)	○	○	○
	S(3m)	○	○	○
	M(5m)	○	○	○
Specified length	**X06** (6m) ~**X10** (10m)	○	○	○
	X11 (11m) ~**X15** (15m)	○	○	○
	X16 (16m) ~**X18** (18m)	○	○	○
Robot cable	**R01** (1m) ~**R03** (3m)	○	○	○
	R04 (4m) ~**R05** (5m)	○	○	○
	R06 (6m) ~**R10** (10m)	○	○	○
	R11 (11m) ~**R15** (15m)	○	○	○
	R16 (16m) ~**R18** (18m)	○	○	○

* Select the length of the actuator cable and the actuator/controller connection cable so that the total is 20m or less.
* Please refer to P. 267 and 283 for more information regarding the maintenance cables.

④ Options

Name	Option Code	Reference Page
Actuator cable length 2m	**Not specified**	See P.197
Actuator cable length 5m	**AC5**	See P.197
Actuator cable length 10m	**AC10**	See P.197
Actuator cable length 15m	**AC15**	See P.197
Brake	**B**	See P.197
Cable exit direction (Bottom)	**CJB**	See P.197
Cable exit direction (Outside)	**CJO**	See P.197
Cable exit direction (Top)	**CJT**	See P.197
Flange	**FL**	See P.198
Motor side-mounted to left (standard)	**ML**	See P.201
Motor side-mounted to right	**MR**	See P.201
Non-motor end specification	**NM**	See P.202
T-slot nut bar (Left)	**NTBL**	See P.202
T-slot nut bar (Right)	**NTBR**	See P.202

* Be sure to confirm with the "Selection Notes (P.204)" when selecting options.

Actuator Specifications

Item	Description
Drive system	Ball screw ϕ12mm, rolled C10
Positioning repeatability	±0.01mm
Lost motion	0.1mm or less
Rod	ϕ40mm
Rod non-rotation precision	0 degrees
Allowable load and torque on rod tip	See P. 246
Rod tip overhang distance	150mm or less
Protective structure	IP65 (IEC 60529/JIS C 0920)
Ambient operating temp. & humidity	0~40°C, 85% RH or less (Non-condensing)

Dimensions

CAD drawings can be downloaded from our website.
www.intelligentactuator.com

2D CAD 3D CAD

*1 When the rod is returning to its home position, please be careful of interference from surrounding objects, as it will travel until it reaches the M.E.
M.E: Mechanical end S.E: Stroke end
*2 If the object attached to the rod has a long overhang length, or precise angular adjustment of the object is required, please do not use the reamed hole when the object is attached to the rod.

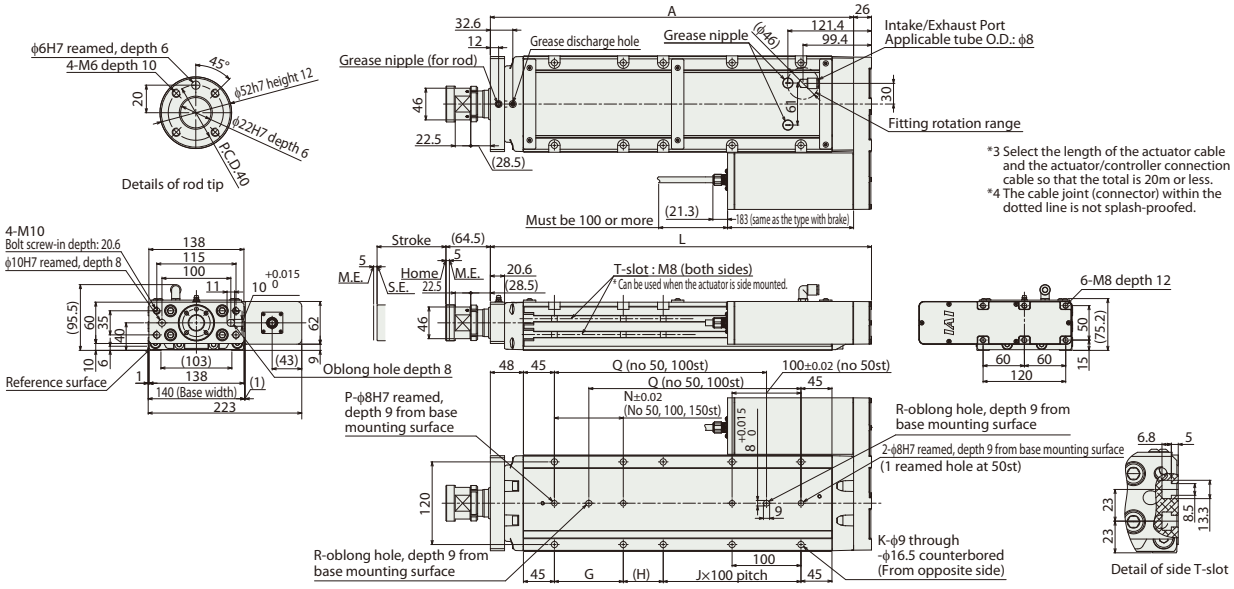

■ RCP6SW-WRA14R

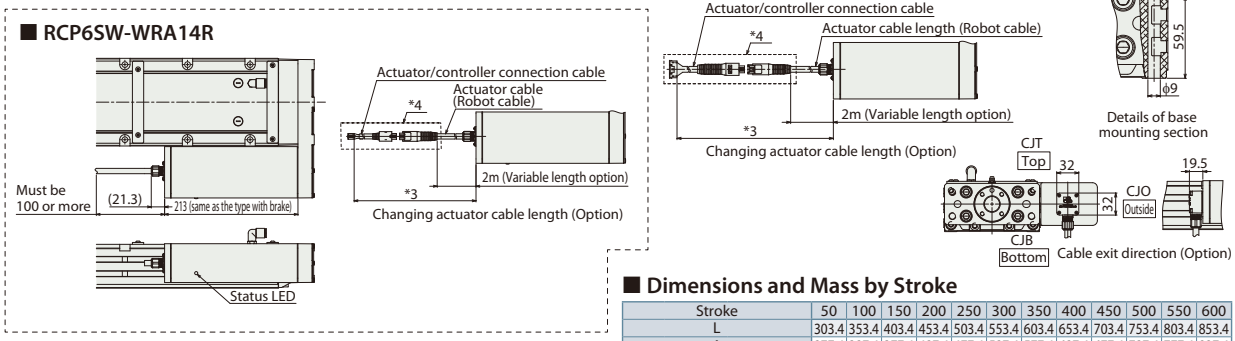

■ Rod Deflection of RCP6(S)W-WRA14R (Reference Values)

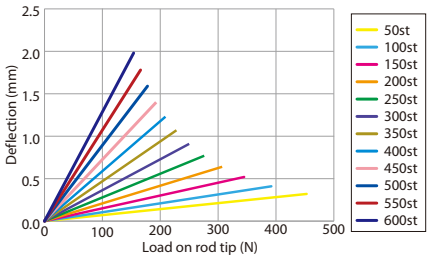

* Please refer to P.254 for more information on component materials.

■ Dimensions and Mass by Stroke

Stroke			50	100	150	200	250	300	350	400	450	500	550	600
L			303.4	353.4	403.4	453.4	503.4	553.4	603.4	653.4	703.4	753.4	803.4	853.4
A			277.4	327.4	377.4	427.4	477.4	527.4	577.4	627.4	677.4	727.4	777.4	827.4
G			-	-	-	100	100	100	100	100	100	100	100	100
H			108	58	108	58	108	58	108	58	108	58	108	58
J			0	1	1	1	1	2	2	3	3	4	4	5
K			4	6	6	8	8	10	10	12	12	14	14	16
N			-	-	-	100	100	100	100	100	100	100	100	100
P			1	1	1	2	2	2	2	2	2	2	2	2
Q			-	-	158	208	258	308	358	408	458	508	558	608
R			0	0	1	1	1	1	1	1	1	1	1	1
Allowable static load on rod tip (N)			454	392	345	307	276	251	229	210	193	179	166	154
Allowable static torque on rod tip (N•m)			30	30	30	30	30	30	30	30	30	30	30	30
3,000km	Allowable dynamic load on rod tip (N)	Load offset 0mm	199	170	148	131	117	104	94	85	77	70	64	58
		Load offset 100mm	100	100	100	100	100	95	87	79	72	66	60	55
	Allowable dynamic torque on rod tip (N•m)		15.0	15.0	15.0	15.0	15.0	14.3	13.0	11.8	10.8	9.9	9.0	8.2
5,000km	Allowable dynamic load on rod tip (N)	Load offset 0mm	167	143	124	109	97	87	78	70	63	57	51	46
		Load offset 100mm	100	100	100	96	87	79	71	65	59	53	48	44
	Allowable dynamic torque on rod tip (N•m)		15.0	15.0	15.0	14.4	13.0	11.8	10.7	9.7	8.8	8.0	7.3	6.6
Mass (kg)	RCP6W	w/o brake	9.4	10.2	11.1	12.0	12.9	13.8	14.7	15.6	16.5	17.4	18.3	19.2
		w/ brake	9.5	10.3	11.2	12.1	13.0	13.9	14.8	15.7	16.6	17.5	18.4	19.3
	RCP6SW	w/o brake	9.6	10.4	11.3	12.2	13.1	14.0	14.9	15.8	16.7	17.6	18.5	19.4
		w/ brake	9.7	10.5	11.4	12.3	13.2	14.1	15.0	15.9	16.8	17.7	18.6	19.5

② Applicable Controllers

The RCP6 series actuators can be operated by the controllers indicated below. Please select the type depending on your intended use. * Please refer to P.271 for more information about the built-in controller of RCP6S series.

Name	External view	Max. number of controlled axes	Input power	Control method: Positioner	Pulse train	Program	Network * Option	Maximum number of positioning points	Reference page
PCON-CYB/PLB/POB		1	DC24V	● * Option	● * Option	–	Network cannot be selected	64	Please contact IAI for more information.
PCON-CB/CGB		1		● * Option	● * Option	–	DeviceNet, CC-Link, PROFIBUS, CompoNet, MECHATROLINK, EtherCAT, EtherNet/IP, PROFINET, SSCNET III/H	512 (768 for network spec.)	See P.255
MCON-C/CG		8		This model is network-compatible only.				256	Please contact IAI for more information.
MCON-LC/LCG		6		–	–	●		256	Please contact IAI for more information.
MSEL-PC/PG		4	Single-phase 100 ~ 230 VAC	–	–	●		30,000	Please contact IAI for more information.
RCM-P6PC		1	Usable within the RCP6S Gateway system.					768	See P.279

Note: · The type of compatible networks will vary depending on the controller. Please refer to reference page for more information.

* For the MCON controller, high-output enabled operation is only available if "high-output setting" is selected as an option. The maximum connectable axes with high-output enabled are C: 4 and LC: 3.

RCP6(S)W-WRA16R

Dust/Splash-Proof Spec | Battery-less Absolute | Motor Unit Type | Side-mounted Motor | Body Width 160* mm | 24v Stepper Motor

Model Specification Items

Series	Type	Encoder Type	Motor Type	Lead	Stroke	Applicable Controller/I/O Type	Cable Length	Options
	WRA16R	WA	60P					
RCP6W: Separate Controller RCP6SW: Built-in Controller		WA: Battery-less Absolute	60P: Stepper Motor 60□ Size	20 :20mm 10 :10mm 5 : 5mm	50:50mm ~ 800:800mm (Every 50mm)	[RCP6W] P4 : PCON-CFB/CGFB [RCP6SW] SE: SIO Type	N : None P : 1m S : 3m M: 5m X□□ : Specified Length R□□ : Robot Cable	Please refer to the options table below. * Please make sure to specify either ML or MR when ordering the side-mounted motor type.

* Body width does not include the width of the side-mounted motor.

* RCP6 does not include a controller. RCP6S includes a built-in controller.
* Please refer to P.20 for more information about the model specification items.

Radial Load Applicable

CE RoHS

Horizontal | Vertical | Side | Ceiling

*Some limitations may apply to horizontal/side/ceiling mountings depending on the model. See page 204. Please contact IAI for more information.

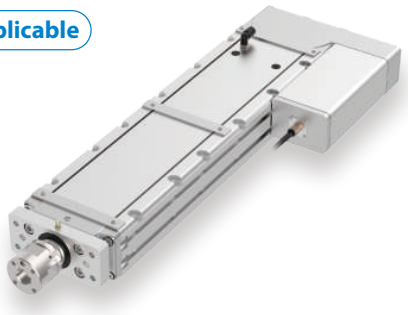

The figure above is the motor side-mounted to left (ML).

POINT Selection Notes

(1) The maximum acceleration/deceleration is 0.1G for lead 5 and 0.2G for lead 10/20.
(2) The actuator specifications displays the payload's maximum value, but it will vary depending on the acceleration and speed. Please refer to the "Selection Guidelines" (Tables of Payload by Speed/Acceleration) on P.242 for more details.
(3) The radial cylinder is equipped with a built-in guide. Please refer to the graphs shown on P.245 and after for the allowable load mass.
(4) Please refer to P205 for performing push-motion operation.
(5) For RCP6SW (built-in controller type), please limit the duty cycle to 70% or less.
(6) The service life of an actuator with lead 5 varies depending on the payload when using vertically. Please refer to P. 206 for more information.
(7) The cable joint connector is not splash-proofed, so it should be located where there is no splash.
(8) The RCP6SW with built-in controller does not have a teaching tool connection port. Connect the teaching tool to the gateway unit and configure parameter data etc. via the gateway unit.

Correlation Diagrams of Speed and Payload

If the ambient temperature is 5°C or below, the speed will be lower than when it exceeds 5°C.

PCON connected.

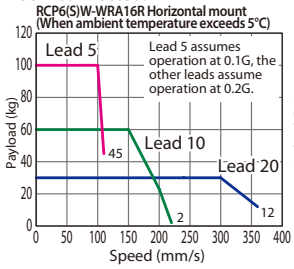

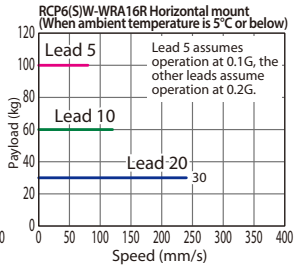

PCON connected.

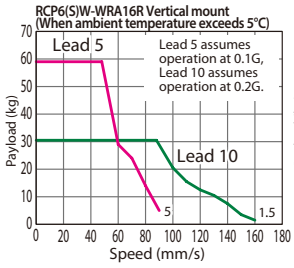

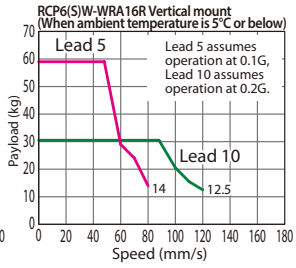

Actuator Specifications

Lead and Payload

* Horizontal external guide rail required for horizontal payload.
** Push force only available during push mode w / limited speed.

Model Number	Lead (mm)	Max. Payload Horizontal (kg)*	Max. Payload Vertical (kg)	Max. Push Force (N)**	Stroke (mm)
RCP6(S)W-WRA16R-WA-60P-20-①-②-③-④	20	30	–	500	50~800 (Every 50mm)
RCP6(S)W-WRA16R-WA-60P-10-①-②-③-④	10	60	30.5	1,000	
RCP6(S)W-WRA16R-WA-60P-5-①-②-③-④	5	100	59	2,000	

Legend: ① Stroke ② Applicable controllers/I/O type ③ Cable length ④ Options

Stroke and Max Speed

(Unit: mm/s)

Lead (mm)	50	100~450 (Every 50mm)	500	550	600	650	700	750	800
20	280 [240]	360 [240]		340 [240]	295 [240]	260 [240]	225 [225]	200 [200]	180 [180]
10	220 <160> [120]		195 <160> [120]	165 <160> [120]	145 [120]	125 [120]	110 [110]	100 [100]	90 [90]
5	110 <90> [80]		95 <90> [80]	80 [80]	70 [70]	60 [60]	55 [55]	50 [50]	45 [45]

Values in brackets < > are for vertical use.
Values in brackets [ ] are when ambient temperature is 5°C or below.

① Stroke

Stroke (mm)	RCP6W	RCP6SW	Stroke (mm)	RCP6W	RCP6SW
50	○	○	**450**	○	○
100	○	○	**500**	○	○
150	○	○	**550**	○	○
200	○	○	**600**	○	○
250	○	○	**650**	○	○
300	○	○	**700**	○	○
350	○	○	**750**	○	○
400	○	○	**800**	○	○

③ Cable Length

Cable Type	Cable Code	RCP6W	RCP6SW
Standard	**P**(1m)	○	○
	S(3m)	○	○
	M(5m)	○	○
Specified length	**X06** (6m) ~**X10** (10m)	○	○
	X11 (11m) ~**X15** (15m)	○	○
	X16 (16m) ~**X18** (18m)	○	○
Robot cable	**R01** (1m) ~**R03** (3m)	○	○
	R04 (4m) ~**R05** (5m)	○	○
	R06 (6m) ~**R10** (10m)	○	○
	R11 (11m) ~**R15** (15m)	○	○
	R16 (16m) ~**R18** (18m)	○	○

* Select the length of the actuator cable and the actuator/controller connection cable so that the total is 20m or less.
* Please refer to P. 267 and 283 for more information regarding the maintenance cables.

④ Options

Name	Option Code	Reference Page
Actuator cable length 2m	**Not specified**	See P.197
Actuator cable length 5m	**AC5**	See P.197
Actuator cable length 10m	**AC10**	See P.197
Actuator cable length 15m	**AC15**	See P.197
Brake	**B**	See P.197
Cable exit direction (Bottom)	**CJB**	See P.197
Cable exit direction (Outside)	**CJO**	See P.197
Cable exit direction (Top)	**CJT**	See P.197
Flange	**FL**	See P.198
Motor side-mounted to left (standard)	**ML**	See P.201
Motor side-mounted to right	**MR**	See P.201
Non-motor end specification	**NM**	See P.202
T-slot nut bar (Left)	**NTBL**	See P.202
T-slot nut bar (Right)	**NTBR**	See P.202

* Be sure to confirm with the "Selection Notes (P.204)" when selecting options.

Actuator Specifications

Item	Description
Drive system	Ball screw ϕ16mm, rolled C10
Positioning repeatability	±0.01mm
Lost motion	0.1mm or less
Rod	ϕ45mm
Rod non-rotation precision	0 degrees
Allowable load and torque on rod tip	See P. 246
Rod tip overhang distance	150mm or less
Protective structure	IP65 (IEC 60529/JIS C 0920)
Ambient operating temp. & humidity	0~40°C, 85% RH or less (Non-condensing)

Dimensions

CAD drawings can be downloaded from our website.
www.intelligentactuator.com

2D CAD 3D CAD

*1 When the rod is returning to its home position, please be careful of interference from surrounding objects, as it will travel until it reaches the M.E.
M.E: Mechanical end S.E: Stroke end
*2 If the object attached to the rod has a long overhang length, or precise angular adjustment of the object is required, please do not use the reamed hole when the object is attached to the rod.

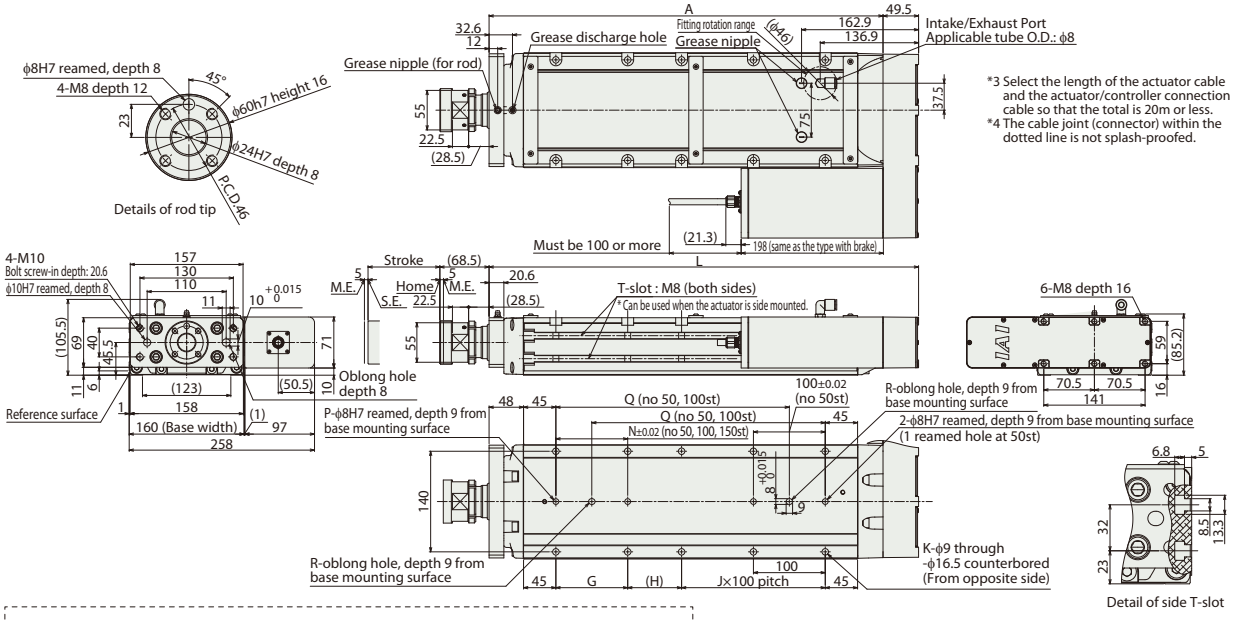

*3 Select the length of the actuator cable and the actuator/controller connection cable so that the total is 20m or less.
*4 The cable joint (connector) within the dotted line is not splash-proofed.

■ RCP6SW-WRA16R

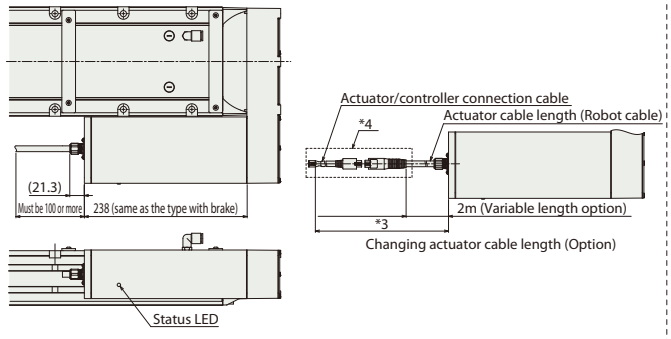

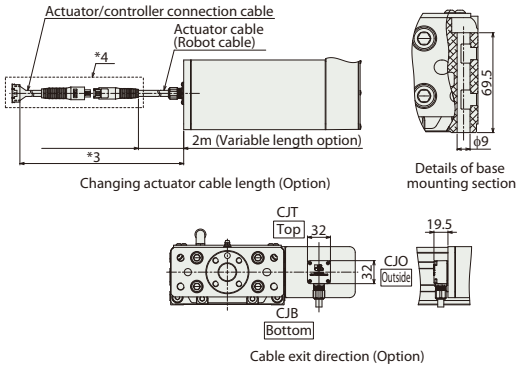

■ Rod Deflection of RCP6(S) W-WRA16R (Reference Values)

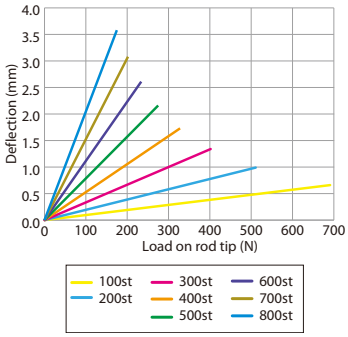

* Please refer to P.254 for more information on component materials.

■ Dimensions and Mass by Stroke

Stroke			50	100	150	200	250	300	350	400	450	500	550	600	650	700	750	800
L			347.9	397.9	447.9	497.9	547.9	597.9	647.9	697.9	747.9	797.9	847.9	897.9	947.9	997.9	1,047.9	1,097.9
A			298.4	348.4	398.4	448.4	498.4	548.4	598.4	648.4	698.4	748.4	798.4	848.4	898.4	948.4	998.4	1,048.4
G			-	-	-	100	100	100	100	100	100	100	100	100	100	100	100	100
H			125	75	125	75	125	75	125	75	125	75	125	75	125	75	125	75
J			0	1	1	1	1	2	2	3	3	4	4	5	5	6	6	7
K			4	6	6	8	8	10	10	12	12	14	14	16	16	18	18	20
N			-	-	-	100	100	100	100	100	100	100	100	100	100	100	100	100
P			1	1	1	2	2	2	2	2	2	2	2	2	2	2	2	2
Q			-	-	175	225	275	325	375	425	475	525	575	625	675	725	775	825
R			0	0	1	1	1	1	1	1	1	1	1	1	1	1	1	1
Allowable static load on rod tip (N)			588	588	588	511	451	402	362	329	300	275	254	235	217	202	188	176
Allowable static torque on rod tip (N•m)			40	40	40	40	40	40	40	40	40	40	40	40	40	40	40	40
3,000km	Allowable dynamic load on rod tip (N)	Load offset 0mm	255	220	191	168	149	134	120	109	99	90	81	74	67	61	55	50
		Load offset 150mm	133	133	133	133	133	122	111	101	92	84	77	70	64	58	53	48
	Allowable dynamic torque on rod tip (N•m)		20.0	20.0	20.0	20.0	20.0	18.3	16.7	15.2	13.8	12.6	11.5	10.5	9.6	8.7	7.9	7.1
5,000km	Allowable dynamic load on rod tip (N)	Load offset 0mm	214	184	160	140	124	111	99	89	80	72	65	59	53	47	42	37
		Load offset 150mm	133	133	133	124	112	101	91	83	75	68	62	56	50	45	40	36
	Allowable dynamic torque on rod tip (N•m)		20.0	20.0	20.0	18.6	16.8	15.2	13.7	12.4	11.3	10.2	9.2	8.4	7.5	6.8	6.0	5.3
Mass (kg)	RCP6W	w/o brake	13.5	14.7	15.9	17.0	18.1	19.3	20.4	21.6	22.7	23.9	25.0	26.2	27.3	28.5	29.6	30.8
		w/ brake	13.8	15.0	16.2	17.3	18.4	19.6	20.7	21.9	23.0	24.2	25.3	26.5	27.6	28.8	29.9	31.1
	RCP6SW	w/o brake	13.7	14.9	16.1	17.2	18.3	19.5	20.6	21.8	22.9	24.1	25.2	26.4	27.5	28.7	29.8	31.0
		w/ brake	14.0	15.2	16.4	17.5	18.6	19.8	20.9	22.1	23.2	24.4	25.5	26.7	27.8	29.0	30.1	31.3

② Applicable Controllers

The RCP6 series actuators can be operated by the controllers indicated below. Please select the type depending on your intended use. * Please refer to P.271 for more information about the built-in controller of RCP6S series.

Name	External view	Max. number of controlled axes	Input power	Control method: Positioner	Pulse train	Program	Network * Option	Maximum number of positioning points	Reference page
PCON-CFB/CGFB		1	DC24V	● * Option	● * Option	–	DeviceNet CC-Link PROFIBUS CompoNet MECHATROLINK EtherCAT EtherNet/IP PROFINET	512 (768 for network spec.)	See P.255